Die Components OMCR
OMCR Normalien
Componenti OMCR

OMCR®
STANDARD DIE COMPONENTS

MAIN INDEX

Die Components
Werkzeugkomponenten
Componenti per Stampi

GB **OMCR**'s line of die components offers an extraordinary variety of items meeting the standards of the leading automotive manufacturers. Thanks to the widespread use of computerised management systems, flexible production systems and wide availability of items in stock, this range of products meets the majority of customers needs and ensures quality, reliability and quick delivery. In this **Die Components** range we offer the **OMCR Standard** series, results of a selection which has allowed us to identify the ideal standard items for an efficient design and manufacture of dies for working sheet metal.

D Die Linie der **Werkzeugkomponenten** bietet eine außergewöhnliche Vielfalt an Artikeln, die den Normen der europäischen Automobilhersteller entsprechen. Dank der EDV-gestützten Steuerung des Unternehmens, flexibler Produktionssysteme und durch einen großen Bestand an fertigen Produkten im Lager deckt diese Produktreihe den Bedarf der Kunden in vollem Umfang ab und gewährleistet Qualität, Zuverlässigkeit und schnelle Lieferung.
Unsere **Werkzeugkomponenten** beinhalten auch die Serie **Standard OMCR**, eine Auswahl an Normalien zur effizienten Konstruktion von Stanzwerkzeugen.

I La linea **Componenti per Stampi** offre una straordinaria varietà di articoli, conformi alle normative delle principali case automobilistiche. Grazie al diffuso utilizzo di sistemi informatici di gestione, di sistemi di produzione flessibili e all'ampia disponibilità di prodotti pronti a magazzino, questa gamma di prodotti risponde in modo esauriente alle necessità dei clienti e garantisce qualità, affidabilità e rapidità nelle consegne.
All'interno della linea **Componenti per Stampi**, proponiamo la serie **Standard OMCR**, frutto di una selezione che ha permesso di individuare i normalizzati ideali per un'efficiente progettazione di stampi lavorazione lamiere.

C10.09	C10.10	C10.11	C10.12	C10.13
BMW-MERCEDES-BENZ-FCA-FORD-OPEL-VW/AUDI	BMW-MERCEDES-BENZ-FCA-FORD-OPEL-VW/AUDI			MERCEDES-BENZ
Gage hardened Einweiser gehärtet Riferimento indurito	Gage Einweiser Riferimento	Gage for sensor Einweiser für Teillagekontolle Riferimento per sensore	Gage Einweiser Riferimento	Gage hardened Einweiser gehärtet Riferimento indurito
24	25	26	27	28

C10.14	C10.15	C10.16	C10.18	C10.20
MERCEDES-BENZ	BMW - FCA	VW/AUDI	BMW - MERCEDES-BENZ	FCA - OPEL
Gage Einweiser Riferimento	Gage for sensor Einweiser für Teillagekontolle Riferimento per sensore	Gage Feineinweiser Riferimento di precisione	Gage Einweiser Riferimento	Front gage Einlaufanschlag Portasensore
28	29	30	31	32

C10.25	C10.30	C10.90	C10.91	C10.92
VW/AUDI				
Support for sensor Lagekontrolle für Platinen Supporto sensore	Gage Einweiser Riferimento	Sensor Induktive sensor Sensore	Connector Steckverbinder Connettore	Sensor Induktive sensor Sensore
33	35	36	37	38

C10.95	C11.08	C11.09	C11.11	C11.12
FORD - VW/AUDI		FCA - VW/AUDI	FCA - VW/AUDI	FCA
Plate for sensor Halterung Piastrina portasensore	Locating cone Kegeldistanz Cono di centraggio	Locating cone Kegeldistanz Cono di centraggio	Locating cone Kegeldistanz Cono di centraggio	Locating pin Zentrierbolzen Perno di centraggio
39	40	42	44	46

C11.15	C11.20	C11.30	C11.31	C11.32
BMW	BMW - VW/AUDI	VW/AUDI	FCA	FCA
Locating pin Zentrierbolzen Perno di centraggio	Locating pin Zentrierbolzen Perno di centraggio	Visual locator setting punch Endkontrollstempel Punzone di visualizzazione	Visual locator punch Endkontrollstempel Punzone di visualizzazione	Adjustment plate Scheibe Rondella di registro
46	47	48	49	50

C11.33	C11.40	C11.45	C11.50	C11.51
FORD	FCA-PSA-RENAULT	FCA-PSA-RENAULT	FCA-PSA-RENAULT	FCA - PSA - RENAULT
Visual locator punch Endkontrollstempel Punzone di visualizzazione	Stamp retainer Halteplatte Portatimbri	Backing plate Druckplatte Reazione	Stamp Buchstabenstempel Punzone marchio	Stamp Buchstabenstempel Punzone marchio
50	51	52	53	54

C12.10.?	C12.11.?	C12.11.?	C12.12	C12.12
	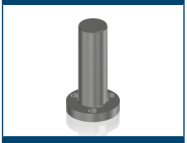	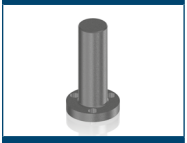		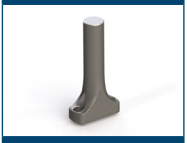
BMW - FORD - OPEL	VW/AUDI	VW/AUDI	BMW - MERCEDES BENZ	BMW - MERCEDES BENZ
Air pin Druckbolzen Candela	Air pin Unterluftbolzen Candela	Air pin Unterluftbolzen Candela	Air pin Unterluftbolzen Candela	Air pin Unterluftbolzen Candela
55	56	57	58	59

C12.12	C12.12.?	C12.16	C12.20	C12.21
			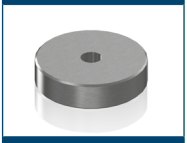	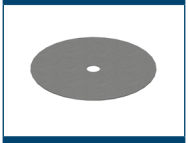
BMW - MERCEDES BENZ	BMW - MERCEDES BENZ	BMW VW/AUDI	FCA	
Air pin Unterluftbolzen Candela	Air pin Unterluftbolzen Candela	Spacer plate toothed Distanzplatte gezahnt Tassello di compensazione	Compensation block Abstandsblock Tassello di compensazione	Shim Ausgleichscheib Spessore
60	61	62	63	63

C12.22	C12.23	C12.24	C12.25	C12.26
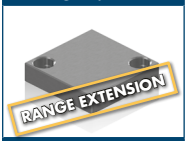				
VW/AUDI	VW/AUDI	BMW - FCA - MERCEDES-BENZ	FORD	VW/AUDI
Pressure plate Druckplatte Piastra di reazione	Pressure plate Druckplatte Piastra di reazione	Pressure plate Druckplatte Piastra di reazione	Balance block Distanzstück Distanziale	Balance block Distanzstück Distanziale
64	65	66	67	68

C12.26.?	C12.27	C12.27.?	C12.28	C12.30
VW/AUDI	VW/AUDI	VW/AUDI	PSA	VW/AUDI
Balance block Distanzstück Distanziale	Balance block Distanzstück Distanziale	Balance block Distanzstück Distanziale	Balance block Distanzstück Distanziale	Spacing bar Abstellbolzen Distanziale
70	72	74	76	78

C12.30.?	C13.10	C13.11	C13.20.?	C13.24
VW/AUDI	VW/AUDI	VW/AUDI	FCA - FORD	
Spacing bar Abstellbolzen Distanziale	Pad retainer pin VDI 3365 Steckbolzen VDI 3365 Perno di arresto VDI 3365	Pad retainer pin VDI 3365 Steckbolzen VDI 3365 Perno di arresto VDI 3365	Retainer bolt Zugbolzensatz Gruppo tirante	Ground collar screw Schraube mit distanzrohr Vite con colletto
80	82	83	84	86

C13.25.?	C13.26.?	C13.27	C13.30	C14.09
	FORD	BMW - VW/AUDI		VW/AUDI
Pad retainer Halteelement Gruppo tirante	Pad retainer Halteelement Gruppo tirante	Anti-rebound pad retainer Halteelement mit Dämpfung Gruppo tirante antirimbalzo	Collar screw Schulter-passschraube Vite con colletto	Key Passfeder Chiavetta di reazione
88	88	89	92	93

C14.10	C14.11	C14.20	C14.25	C14.28
FCA	VW/AUDI			VW/AUDI
Key Passfeder Chiavetta di reazione	Retainer Haltestück Ritegno per matrice	Key Passfeder Chiavetta di reazione	Key Passfeder Chiavetta di reazione	Key Passfeder Chiavetta
94	94	95	96	97

C14.30	C15.10	C15.11	C15.12	C15.13
		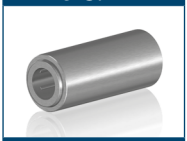		
VW/AUDI	FCA	FCA	FCA	FCA
Locating block Fangbacke Tassello di centraggio	Clamp Befestigungselement Morsetto	Sleeve Führungseinheit Canotto guida	Guide post Führungssaule Colonna	Union nut Befestigungselement Dado di unione
98	99	99	100	101

C15.14	C15.15	C16.18	C16.19	C16.20
		VW/AUDI	VW/AUDI	VW/AUDI
Air coupling bracket Luftanschlussblock Supporto innesti rapidi	Flux control Verteilerblock Regolatore di flusso	Roller Rolle Rotella	Roller Rolle Rotella	Roller stock lifter Federnde laufrolle Rullino sollevamento nastro
102	103	104	104	105

C16.20	C16.21	C16.25	C16.26	C16.27
VW/AUDI	FCA		FCA	BMW - MERCEDES-BENZ
Roller stock lifter Federnde laufrolle Rullino sollevamento nastro	Roller group Förderrolle Gruppo rullini	Coil support Abstreifer Sollevatore nastro	Ball caster Kugelrollensystem Sfera portante	Coil guide roller Führungsrolle Guida nastro
106	107	108	109	110

C16.30	C16.31	C16.40	C16.45	C16.50
	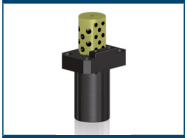			
		FCA		VW/AUDI
Flange lifter Abstreifer Sflangiatore	Flange lifter Abstreifer Sflangiatore	Spring plunger Federne druckstücke Espulsore a molla	Spring plunger Federne druckstücke Espulsore a molla	Spring rams Federbolzen Sollevatore
111	112	113	114	115

C17.10	C17.11	C17.15	C17.16	C17.17
FCA - PSA				
Elastomer spring Elastomerfeder Molla in elastomero	Elastomer spring Elastomerfeder Molla in elastomero	Elastomer stripper Abstreifer Estrattore per punzoni	Washer Scheibe Rondella	Elastomer spring Elastomerfeder Molla in elastomero
116	119	122	122	123

C17.18	C17.19	C17.20	C17.21	C17.27
		FCA - PSA	OPEL	BMW - VW/AUDI
Stripping unit - Pressure plate Abstreifer - Druckplatte Piastra premente dell'estrattore	Stripping unit - Mounting plate Abstreifer - Halteplatte Piastra di fissaggio dell'estrattore	Elastomer cap Elastomerdruckstück Puntalino in elastomero	Shock absorber Halteelement Ammortizzatore	Anti-rebound elastomer Dämpfungselement Ammortizzatore antirimbalzo
124	124	125	125	126

C17.30	C17.31	C17.32	C17.40	C17.51
FCA			FCA - VW/AUDI	VW/AUDI - BMW
Elastomer spring pin Aufnahmebolzen Perno per molle in elastomero	Washer for elastomer spring Federscheibe Rondella per molle in elastomero	Column DIN 9835 Führungsbolzen DIN 9835 Colonna di guida DIN 9835	Stripper for blanking dies Abstreifer für Platinenschnitte Estrattore per stampi	Anti-rebound elastomer Dämpfungselement Ammortizzatore antirimbalzo
127	128	129	130	131

C17.52	C18.05	C18.06	C18.07	C18.10
BMW	BMW - VW/AUDI	VW/AUDI	BMW - VW/AUDI	FCA
Anti-rebound elastomer Dämpfungselement Ammortizzatore antirimbalzo	Anti-rebound slide stop Arretierung gegen Rückfederung Arresto anti rimbalzo	Slide stop block Schieberanschlag Arresto slitta	Anti-rebound slide stop Arretierung gegen Rückfederung Arresto anti rimbalzo	Slide stop block Schieberanschlag Arresto slitta
132	133	134	135	136

C18.11	C18.12	C18.20.?	C18.21	C18.25
VW/AUDI	VW/AUDI	FCA	FCA	
Slide stop block Schieberanschlag Arresto slitta	Slide stop block Schieberanschlag Arresto slitta	Positive return plate Zwangsrückholer Gancio di sicurezza	Key Passfeder Chiavetta	Cam blank-holder guide Gleitplatte für Schieber Guida per premilamiera
136	137	138	139	140

C18.30	C18.31
FORD	FCA
Coupling plate Befestigungsplatte Staffa di reazione	Coupling nut Kupplungsmutter Aggancio staffa
141	142

OMCR

GAGE HARDENED - EINWEISER GEHÄRTET - RIFERIMENTO INDURITO

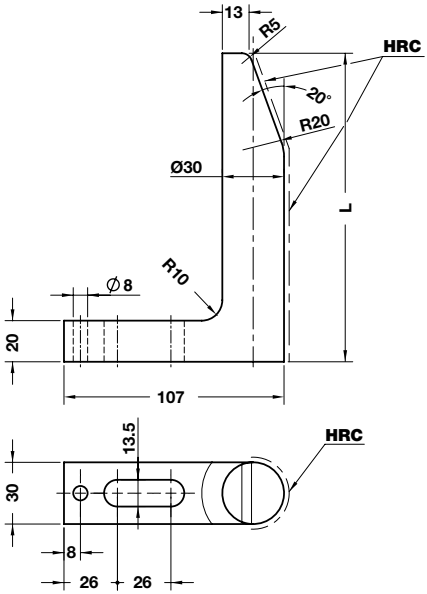

Notes

Material: CK60 - **HRC:** 56÷60

WEB

Delivery time
Lieferzeit in Werktagen
Tempi di spedizione

STOCK = ●

10 = ○

ORDER EXAMPLE

Art.	L=70
C10.09.	070

OMCR CODE	L	Delivery Time	OMCR CODE	L	Delivery Time	OMCR CODE	L	Delivery Time
C10.09.065	65	●	C10.09.145	145	○	C10.09.225	225	○
C10.09.070	70	○	C10.09.150	150	●	C10.09.230	230	○
C10.09.075	75	○	C10.09.155	155	○	C10.09.235	235	○
C10.09.080	80	○	C10.09.160	160	○	C10.09.240	240	○
C10.09.085	85	○	C10.09.165	165	○	C10.09.245	245	○
C10.09.090	90	●	C10.09.170	170	○	C10.09.250	250	●
C10.09.095	95	○	C10.09.175	175	○	C10.09.260	260	○
C10.09.100	100	○	C10.09.180	180	●	C10.09.270	270	○
C10.09.105	105	○	C10.09.185	185	○	C10.09.280	280	○
C10.09.110	110	○	C10.09.190	190	○	C10.09.290	290	○
C10.09.115	115	○	C10.09.195	195	○	C10.09.300	300	●
C10.09.120	120	●	C10.09.200	200	○	C10.09.310	310	○
C10.09.125	125	○	C10.09.205	205	○	C10.09.320	320	○
C10.09.130	130	○	C10.09.210	210	○	C10.09.330	330	○
C10.09.135	135	○	C10.09.215	215	○	C10.09.340	340	○
C10.09.140	140	○	C10.09.220	220	○	C10.09.350	350	●

OMCR

GAGE - EINWEISER - RIFERIMENTO

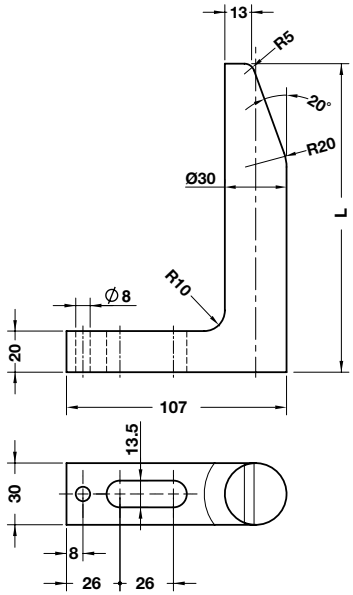

Notes

Material: CK60

WEB

Standard OMCR

Delivery time
Lieferzeit in Werktagen
Tempi di spedizione

STOCK = ●

10 = ○

ORDER EXAMPLE

Art.	L=70
C10.10.	070

OMCR CODE	L	Delivery Time	OMCR CODE	L	Delivery Time	OMCR CODE	L	Delivery Time
C10.10.065	65	●	C10.10.145	145	○	C10.10.225	225	○
C10.10.070	70	○	C10.10.150	150	●	C10.10.230	230	○
C10.10.075	75	○	C10.10.155	155	○	C10.10.235	235	○
C10.10.080	80	○	C10.10.160	160	○	C10.10.240	240	○
C10.10.085	85	○	C10.10.165	165	○	C10.10.245	245	○
C10.10.090	90	●	C10.10.170	170	○	C10.10.250	250	●
C10.10.095	95	○	C10.10.175	175	○	C10.10.260	260	○
C10.10.100	100	○	C10.10.180	180	●	C10.10.270	270	○
C10.10.105	105	○	C10.10.185	185	○	C10.10.280	280	○
C10.10.110	110	○	C10.10.190	190	○	C10.10.290	290	○
C10.10.115	115	○	C10.10.195	195	○	C10.10.300	300	●
C10.10.120	120	●	C10.10.200	200	○	C10.10.310	310	○
C10.10.125	125	○	C10.10.205	205	○	C10.10.320	320	○
C10.10.130	130	○	C10.10.210	210	○	C10.10.330	330	○
C10.10.135	135	○	C10.10.215	215	○	C10.10.340	340	○
C10.10.140	140	○	C10.10.220	220	○	C10.10.350	350	●

OMCR

GAGE FOR SENSOR - EINWEISER FÜR TEILLAGEKONTROLLE - RIFERIMENTO PER SENSORE

Notes

1. **Material:** CK60
   HRC: 50÷55
2. **Material:** St37

Application example

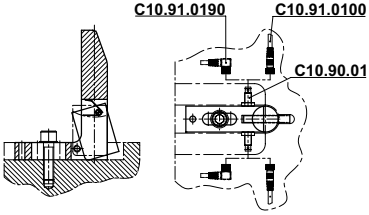

STOCK ... 3D WEB

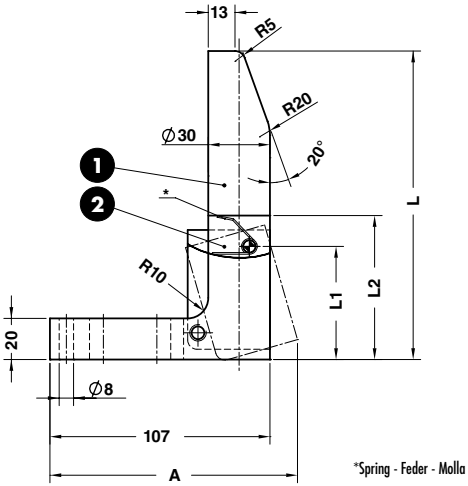

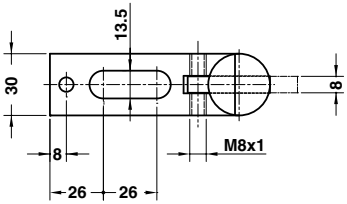

ORDER EXAMPLE	Art.	L=180
	C10.11.	180

OMCR CODE	A	L	L1	L2
C10.11.120	120	120	55	70
C10.11.150	120	150	55	70
C10.11.180	124	180	105	120
C10.11.250	124	250	105	120

GAGE - EINWEISER - RIFERIMENTO

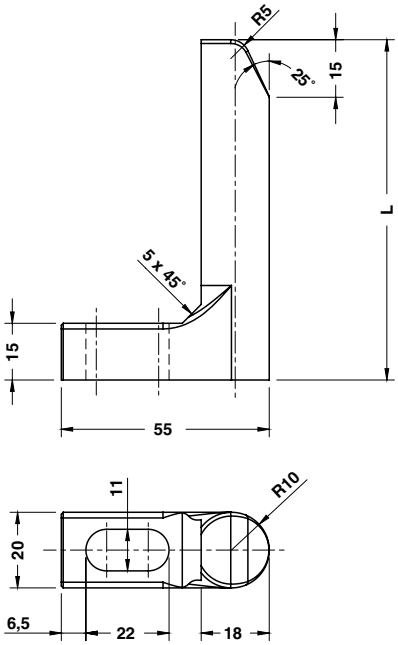

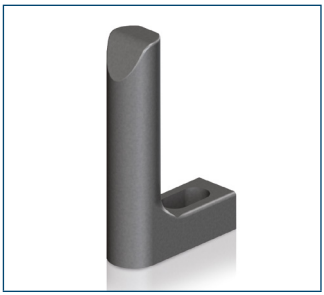

STOCK

3D WEB

Notes

Material: CK45

ORDER EXAMPLE	Art.	L=90
	C10.12.	090

OMCR CODE	L
C10.12.055	55
C10.12.065	65
C10.12.090	90
C10.12.095	95
C10.12.120	120

C10.13

OMCR

GAGE HARDENED - EINWEISER GEHÄRTET - RIFERIMENTO INDURITO

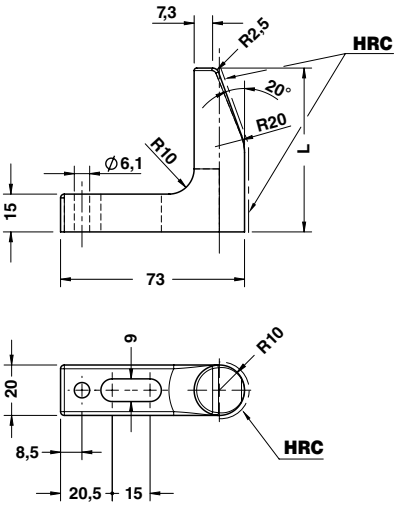

STOCK | 3D WEB

Notes

Material: CK60 - **HRC:** 58÷60

ORDER EXAMPLE	Art.	L=65
	C10.13.	065

OMCR CODE	L
C10.13.065	65
C10.13.090	90

C10.14

OMCR

GAGE - EINWEISER - RIFERIMENTO

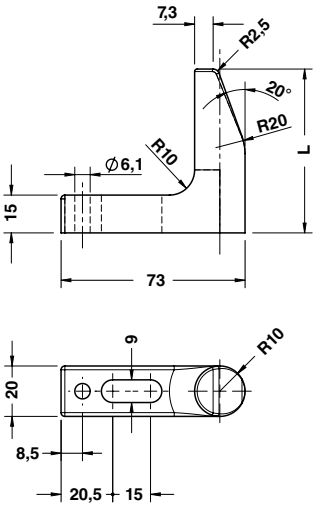

STOCK | 3D WEB

Notes

Material: CK60

ORDER EXAMPLE	Art.	L=65
	C10.14.	065

OMCR CODE	L
C10.14.065	65
C10.14.090	90

GAGE FOR SENSOR - EINWEISER FÜR TEILLAGEKONTROLLE - RIFERIMENTO PER SENSORE

Notes

1
Material: CK60

2
Material: St37 - **HRC:** 58÷60

Application example

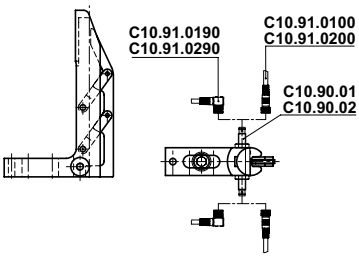

STOCK WEB

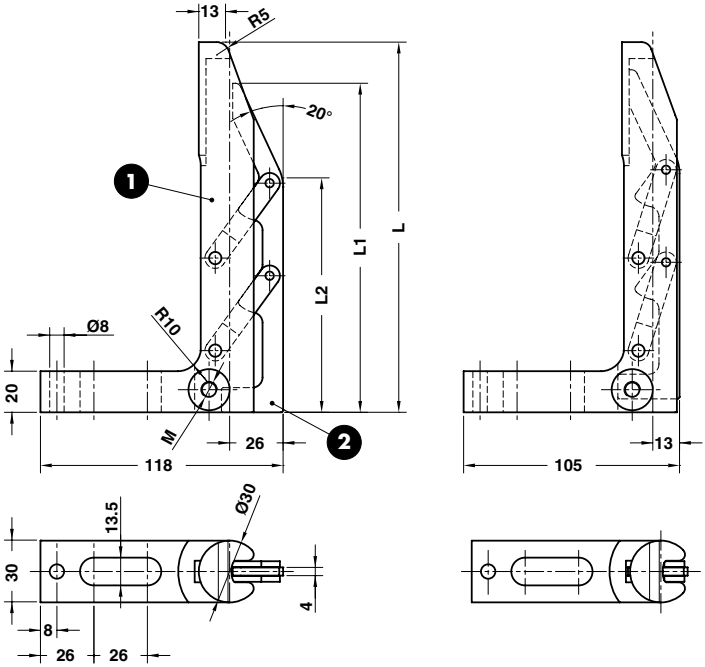

ORDER EXAMPLE	Art.	L=120	L1=113	M=8x1
	C10.15.	120	113	08

OMCR CODE	L	L1	L2	M
C10.15.12011308	120	113	78	8x1
C10.15.12011312	120	113	78	12x1
C10.15.15013008	150	130	90	8x1
C10.15.15013012	150	130	90	12x1
C10.15.18016008	180	160	114	8x1
C10.15.18016012	180	160	114	12x1
C10.15.25016008	250	160	114	8x1
C10.15.25016012	250	160	114	12x1
C10.15.25023008	250	230	184	8x1
C10.15.25023012	250	230	184	12x1

OMCR

PRECISION GAGE - FEINENWEISER - RIFERIMENTO DI PRECISIONE

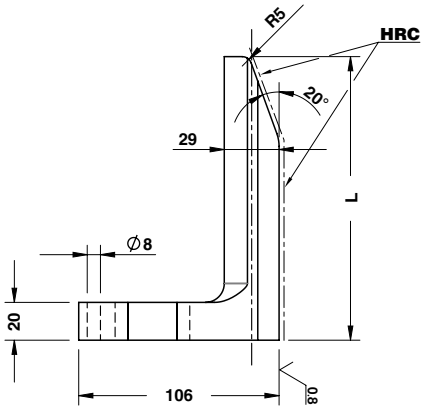

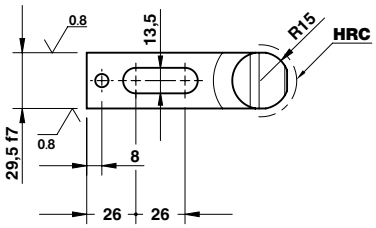

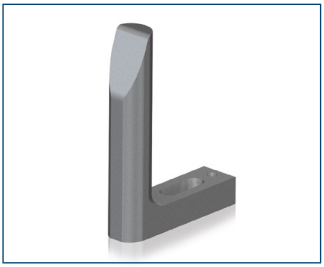

Notes

Material: CK60 - **HRC:** 58÷60

WEB

Delivery time
Lieferzeit in Werktagen
Tempi di spedizione

STOCK = ●

15 = ○

ORDER EXAMPLE	Art.	L=70
	C10.16.	070

OMCR CODE	L	Delivery Time	OMCR CODE	L	Delivery Time	OMCR CODE	L	Delivery Time
C10.16.065	65	●	C10.16.145	145	○	C10.16.225	225	○
C10.16.070	70	○	C10.16.150	150	●	C10.16.230	230	○
C10.16.075	75	○	C10.16.155	155	○	C10.16.235	235	○
C10.16.080	80	○	C10.16.160	160	○	C10.16.240	240	○
C10.16.085	85	○	C10.16.165	165	○	C10.16.245	245	○
C10.16.090	90	●	C10.16.170	170	○	C10.16.250	250	●
C10.16.095	95	○	C10.16.175	175	○	C10.16.260	260	○
C10.16.100	100	○	C10.16.180	180	●	C10.16.270	270	○
C10.16.105	105	○	C10.16.185	185	○	C10.16.280	280	○
C10.16.110	110	○	C10.16.190	190	○	C10.16.290	290	○
C10.16.115	115	○	C10.16.195	195	○	C10.16.300	300	●
C10.16.120	120	●	C10.16.200	200	○	C10.16.310	310	○
C10.16.125	125	○	C10.16.205	205	○	C10.16.320	320	○
C10.16.130	130	○	C10.16.210	210	○	C10.16.330	330	○
C10.16.135	135	○	C10.16.215	215	○	C10.16.340	340	○
C10.16.140	140	○	C10.16.220	220	○	C10.16.350	350	●

OMCR

GAGE - EINWEISER - RIFERIMENTO

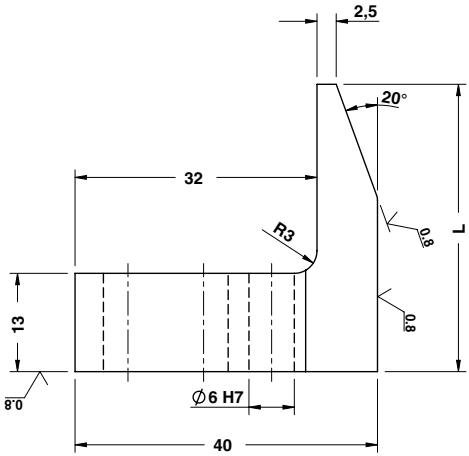

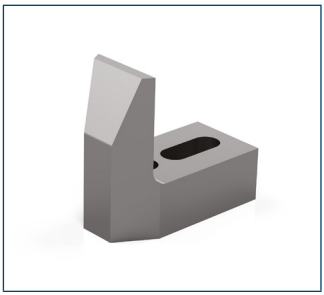

STOCK

3D WEB

Notes

Material: 21MnCr5 - **HRC:** 58÷60

ORDER EXAMPLE	Art.	L=38
	C10.18.	038

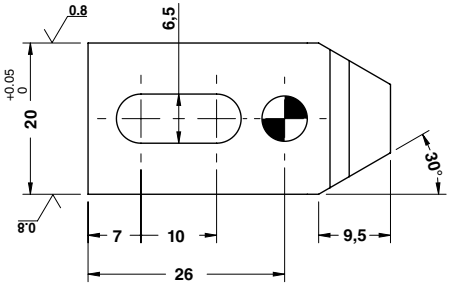

OMCR CODE	L
C10.18.028	28
C10.18.038	38
C10.18.048	48
C10.18.058	58
C10.18.068	68
C10.18.078	78
C10.18.088	88

OMCR

FRONT GAGE - EINLAUFANSCHLAG - PORTASENSORE

Notes

Material: St37

Application example

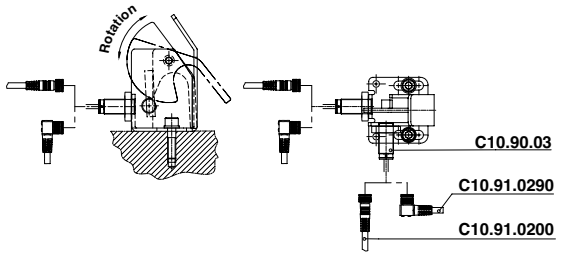

STOCK

3D WEB

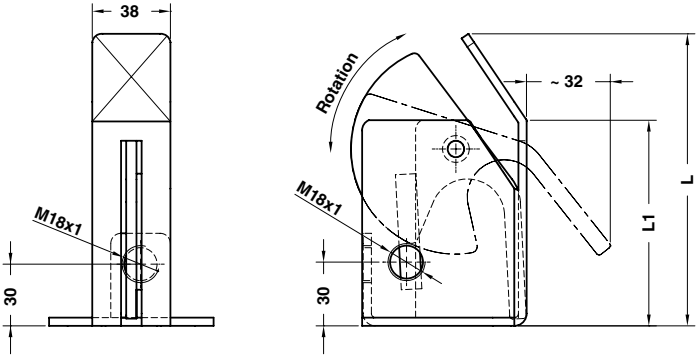

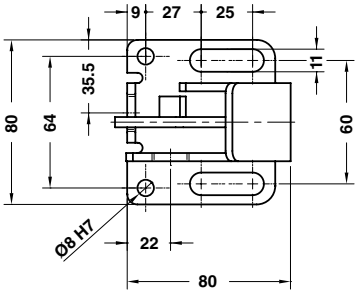

ORDER EXAMPLE	Art.	L=142
	C10.20.	142

OMCR CODE	L	L1
C10.20.117	117	75
C10.20.142	142	100
C10.20.192	192	150

SUPPORT FOR SENSOR - LAGEKONTROLLE FÜR PLATINEN - SUPPORTO SENSORE

Notes

Material: Steel

Application example

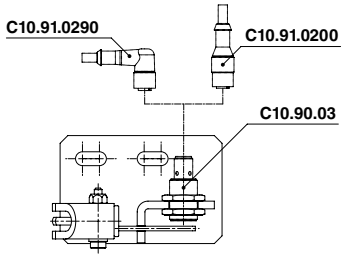

STOCK

3D WEB

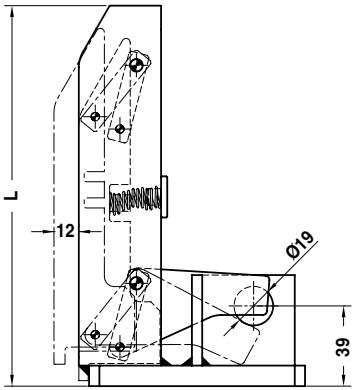

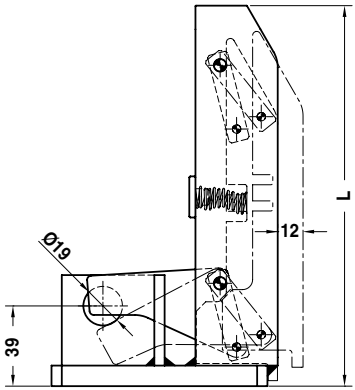

FORM A

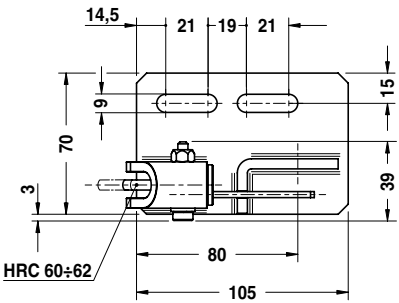

FORM B

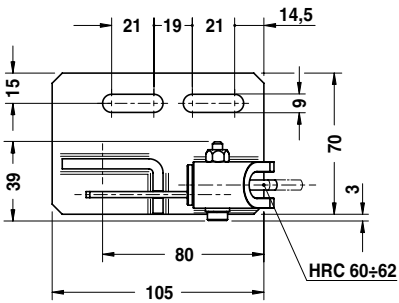

ORDER EXAMPLE

Art.	TYPE
C10.25.	01

OMCR CODE	TYPE	L	FORM
C10.25.01	01	145	A
C10.25.02	02	145	B
C10.25.03	03	185	A
C10.25.04	04	185	B
C10.25.25	25	225	A
C10.25.26	26	225	B

OMCR

SUPPORT FOR SENSOR - LAGEKONTROLLE FÜR PLATINEN - SUPPORTO SENSORE

Notes

Material: Steel

Application example

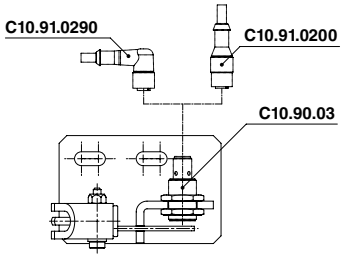

STOCK

3D WEB

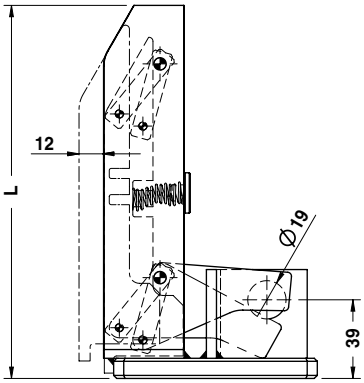

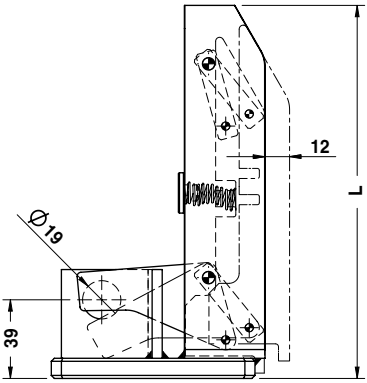

FORM A

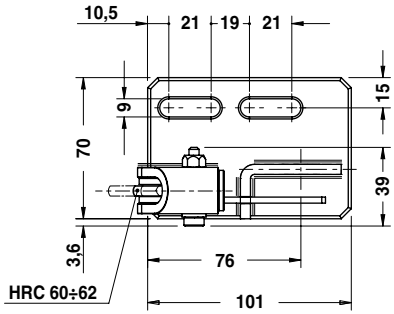

FORM B

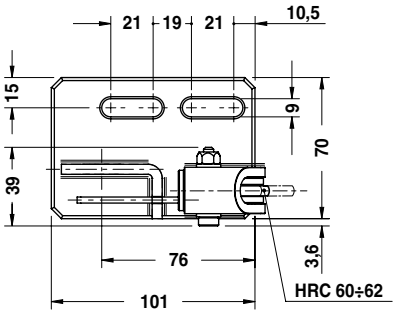

ORDER EXAMPLE

Art.	TYPE
C10.25.	30

OMCR CODE	TYPE	L	FORM
C10.25.30	30	145	A
C10.25.31	31	145	B
C10.25.32	32	185	A
C10.25.33	33	185	B
C10.25.34	34	225	A
C10.25.35	35	225	B

GAGE - EINWEISER - RIFERIMENTO

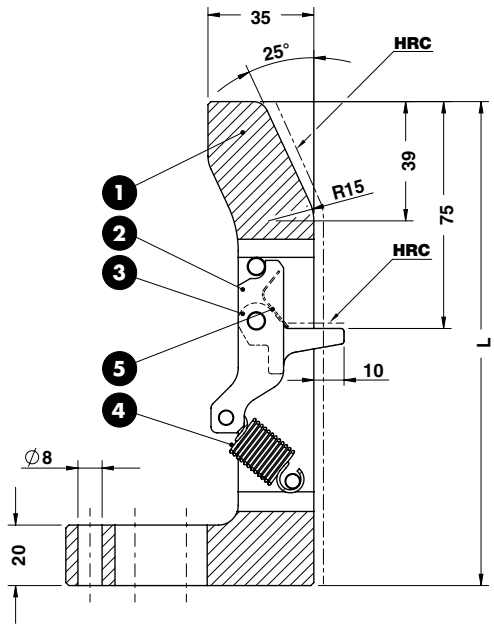

STOCK

WEB

Notes

1 3
Material: CK45 - **HRC:** 58÷60

2 **Material:** CK45 - **HRC:** 54÷56

4 Spring

5 Spring

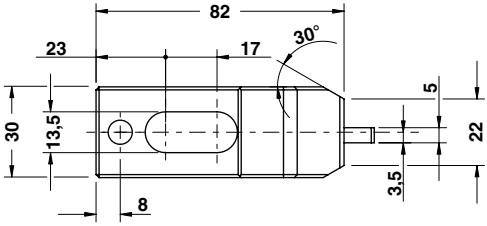

ORDER EXAMPLE	Art.	L=180	F1=5,9
	C10.30.	180	05

OMCR CODE	L	F1(N)	F2(N)
C10.30.16005	160	5,9	18,5
C10.30.16010	160	10	30
C10.30.17005	170	5,9	18,5
C10.30.17010	170	10	30
C10.30.18005	180	5,9	18,5
C10.30.18010	180	10	30
C10.30.19005	190	5,9	18,5
C10.30.19010	190	10	30
C10.30.20005	200	5,9	18,5
C10.30.20010	200	10	30

Application example

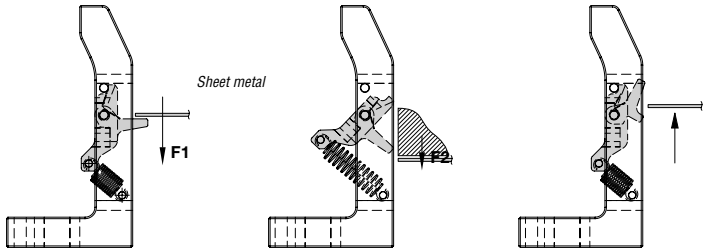

Load position — Closing position — Extraction position

OMCR

SENSOR - INDUKTIVE SENSOR - SENSORE

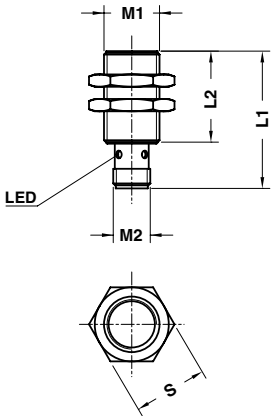

STOCK 3D WEB

Notes

Manufactured by
Hersteller - Costruttore: **BALLUFF**

Application example

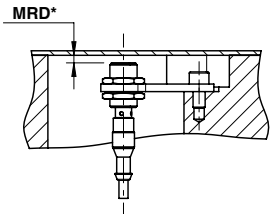

*Max reading distance
Maximale Lesereichweite
Distanza massima di lettura

ORDER EXAMPLE

Art.
C10.90.01

OMCR CODE	L1	L2	M1	M2	S	MRD* on steel (mm)	MRD* on aluminium (mm)
C10.90.01	30	23,5	M8x1	M8x1	13	1,5	-
C10.90.02	45	30	M12x1	M12x1	17	4	-
C10.90.03	44,5	29,5	M18x1	M12x1	24	5	3
C10.90.04	44,5	30	M30x1,5	M12x1	36	10	6

TECHNICAL DATA	C10.90.01	C10.90.02	C10.90.03	C10.90.04
1 **Rated operational voltage (Ue)**	24 V DC	24 V DC	24 V DC	24 V DC
2 **Supply voltage (Ub)**	10...30 V DC	10...30 V DC	10...30 V DC	10...30 V DC
3 **No load supply current (Io max.)**	≤ 7 mA	≤ 10 mA	≤ 10 mA	≤ 25 mA
4 **Residual current (Ir)**	≤ 10 µA	≤ 50 µA	≤ 50 µA	≤ 80 µA
5 **Repeat accuracy (R)**	≤ 5 %	≤ 5 %	≤ 5 %	≤ 5 %
6 **Ambient temperature range (Ta)**	-40…+85° C	-25…+85° C	-25…+70° C	-25…+70° C
7 **Frequency of operating cycles (f)**	5000 Hz	2000 Hz	1000 Hz	150 Hz
8 **Degree of protection per IEC 60529**	IP 68	IP 68	IP 67	IP 67
9 **Housing material**	Stainless Steel	Stainless Steel	Brass	Brass
10 **Connection**	Connector	Connector	Connector	Connector
11 **Approval**	CE/UL	CE/UL	CE/UL	CE/UL
12 **Switching output**	PNP normally open	PNP normally open	PNP normally open	PNP normally open

CONNECTOR - STECKVERBINDER - CONNETTORE

FORM A

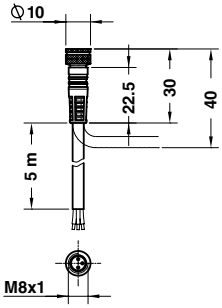

FORM B

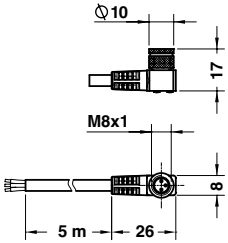

FORM C

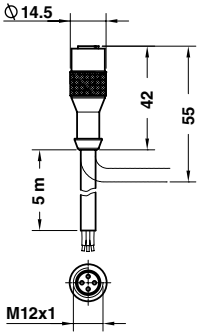

FORM D

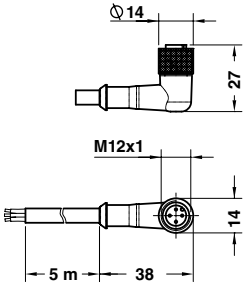

STOCK

3D WEB

Notes

Manufactured by
Hersteller - Costruttore: **BALLUFF**

ORDER EXAMPLE

Art.
C10.91.0190

OMCR CODE	FORM
C10.91.0100	A
C10.91.0190	B
C10.91.0200	C
C10.91.0290	D

SENSOR - INDUKTIVE SENSOR - SENSORE

FORM A

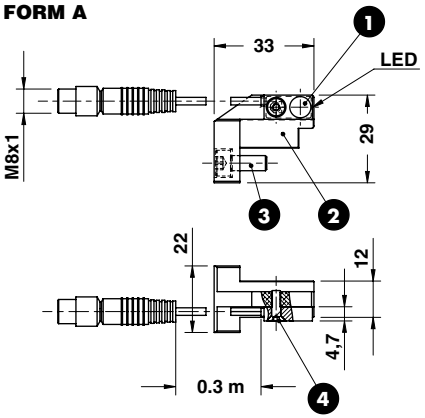

FORM B

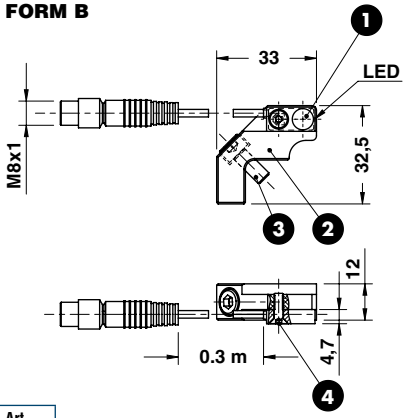

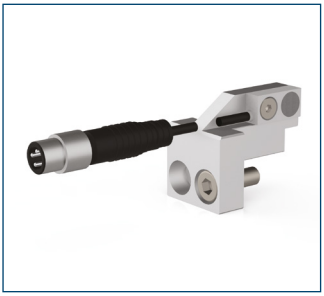

STOCK ... 3D WEB

Notes

1. Manufactured by Hersteller - Costruttore: **BALLUFF**
2. Aluminium
3. M5x12 DIN 912
4. M3x10 DIN 7991

Application example

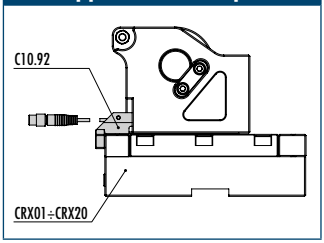

ORDER EXAMPLE

Art.
C10.92.01

* Max reading distance
Maximale Lesereichweite
Distanza massima di lettura

OMCR CODE	Form	MRD* on steel (mm)	Using with cam units
C10.92.01	A	2	CRX01
C10.92.02	B	2	CRX03, CRX05, CRX15, CRX20

SENSOR TECHNICAL DATA	
1 Rated operational voltage (Ue)	24 V DC
2 Supply voltage (Ub)	10...30 V DC
3 No load supply current (Io max.)	≤ 10 mA
4 Residual current (Ir)	≤ 50 µA
5 Repeat accuracy (R)	≤ 1 %
6 Ambient temperature range (Ta)	-25…+70° C
7 Frequency of operating cycles (f)	5000 Hz
8 Degree of protection per IEC 60529	IP 67
9 Housing material	Brass
10 Connection	Cable with connector, 0.30 m
11 Approval	CE/UL
12 Switching output	PNP normally open

PLATE FOR SENSOR - HALTERUNG - PIASTRINA PORTASENSORE

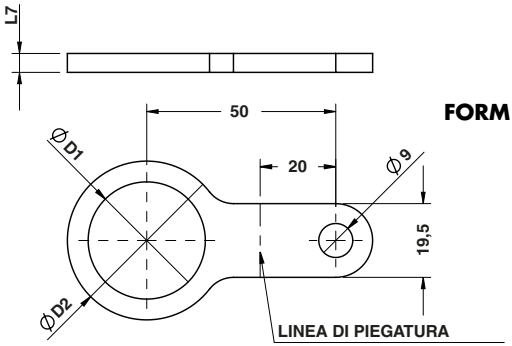

FORM A

STOCK 3D WEB

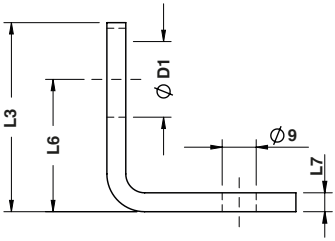

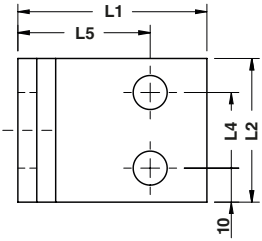

FORM B

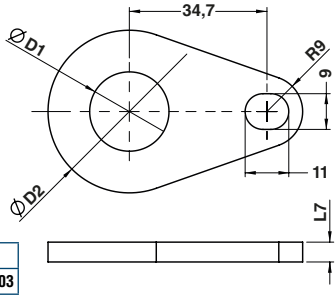

FORM C

Notes

Material: St37

Application example

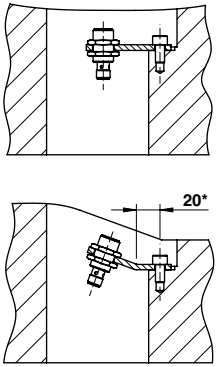

* Biegekante
Edge bending
Linea di piegatura

ORDER EXAMPLE | Art. C10.95.03

OMCR CODE	L1	L2	L3	L4	L5	L6	L7	D1	D2	FORM	Using with sensor
C10.95.01	-	-	-	-	-	-	5	19	30	A	C10.90.03
C10.95.02	-	-	-	-	-	-	5	31	42	A	C10.90.04
C10.95.03	80	50	60	30	60	35	7	19	-	B	C10.90.03
C10.95.04	80	50	60	30	60	35	7	31	-	B	C10.90.04
C10.95.05	40	40	80	20	25	-	6	-	-	B	-
C10.95.06	-	-	-	-	-	-	5	20	41	C	C10.90.03

LOCATING CONE - KEGELDISTANZ - CONO DI CENTRAGGIO

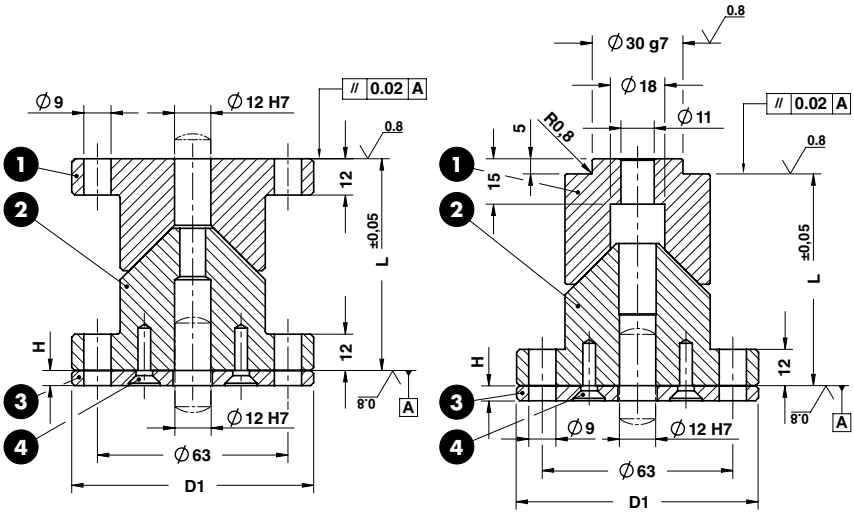

FORM A

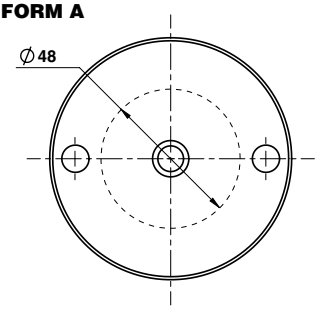

FORM C

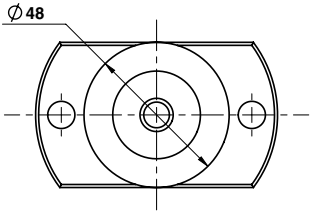

FORM B

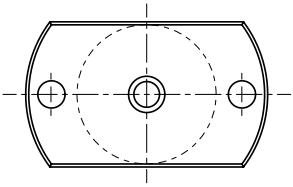

LOCATING CONE - KEGELDISTANZ - CONO DI CENTRAGGIO

Notes

1 2 **Material:** 16MnCr5 - **HRC:** 60÷62

3 **Material:** CK45

4 M5x12 DIN 7991

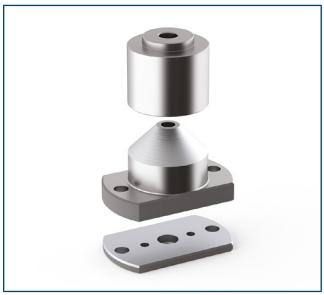

STOCK ... 3D WEB

ORDER EXAMPLE

Art.	D1=80	L=70	FORM	TYPE
C11.08.	80	70	A	01

OMCR CODE	D1	L	H	FORM	TYPE
C11.08.08070A00	80	70	5	A	00
C11.08.08070A01	80	70	5,5	A	01
C11.08.08070B00	80	70	5	B	00
C11.08.08070B01	80	70	5,5	B	01
C11.08.08070C00	80	70	5	C	00
C11.08.08070C01	80	70	5,5	C	01

LOCATING CONE - KEGELDISTANZ - CONO DI CENTRAGGIO

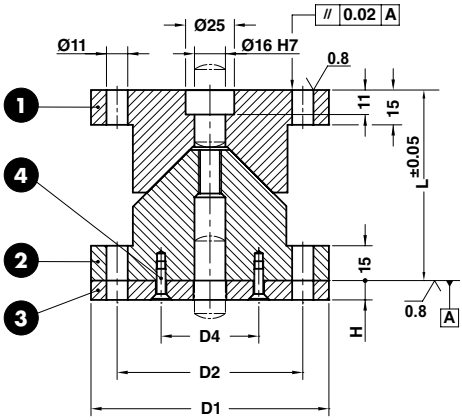

FORM A

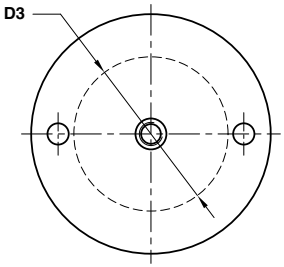

FORM B

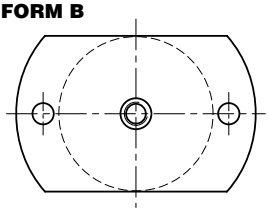

FORM C

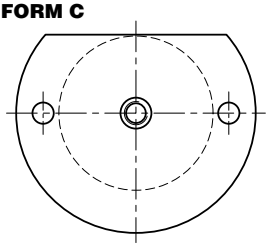

OMCR

LOCATING CONE - KEGELDISTANZ - CONO DI CENTRAGGIO

Notes

1 2 **Material:** 16MnCr5 - **HRC:** 60÷62

3 **Material:** CK45

4 M5x16 DIN 7991

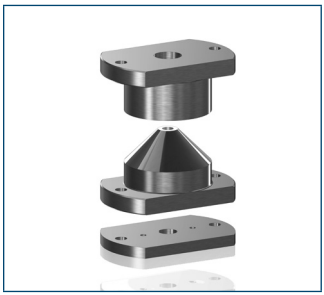

STOCK ... 3D WEB

ORDER EXAMPLE

Art.	D1=100	L=80	FORM	TYPE
C11.09.	100	80	B	01

OMCR CODE	D1	D2	D3	D4	L	H	FORM	TYPE
C11.09.10080A00	100	76	58	40,5	80	10,5	A	00
C11.09.10080A01	100	76	58	40,5	80	10	A	01
C11.09.10080B00	100	76	58	40,5	80	10,5	B	00
C11.09.10080B01	100	76	58	40,5	80	10	B	01
C11.09.10080C00	100	76	58	40,5	80	10,5	C	00
C11.09.10080C01	100	76	58	40,5	80	10	C	01
C11.09.12090A00	120	96	78	50,5	90	10,5	A	00
C11.09.12090A01	120	96	78	50,5	90	10	A	01
C11.09.12090B00	120	96	78	50,5	90	10,5	B	00
C11.09.12090B01	120	96	78	50,5	90	10	B	01
C11.09.12090C00	120	96	78	50,5	90	10,5	C	00
C11.09.12090C01	120	96	78	50,5	90	10	C	01

LOCATING CONE - KEGELDISTANZ - CONO DI CENTRAGGIO

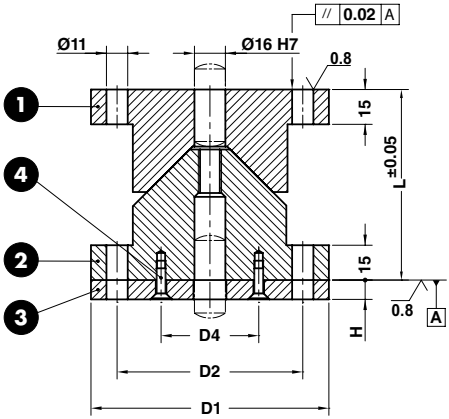

"FORM A"

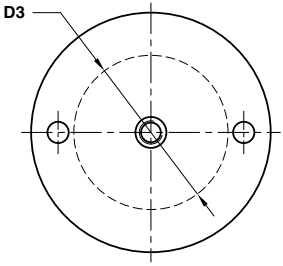

"FORM B"

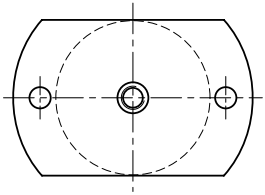

"FORM C"

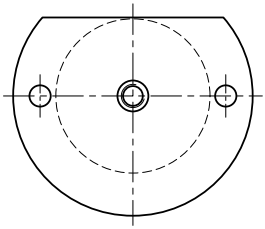

LOCATING CONE - KEGELDISTANZ - CONO DI CENTRAGGIO

Notes

1 2 **Material:** 16MnCr5 - **HRC:** 60÷62

3 **Material:** CK45

4 M5x16 DIN 7991

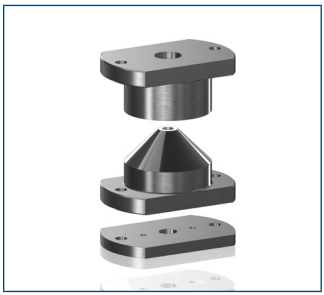

STOCK

WEB

ORDER EXAMPLE	Art.	D1=100	L=80	FORM	TYPE
	C11.11.	100	80	B	01

OMCR CODE	D1	D2	D3	D4	L	H	FORM	TYPE
C11.11.10080A00	100	76	58	40,5	80	10,5	A	00
C11.11.10080A01	100	76	58	40,5	80	10	A	01
C11.11.10080A02	100	76	58	40,5	80	5,5	A	02
C11.11.10080A03	100	76	58	40,5	80	5	A	03
C11.11.10080B00	100	76	58	40,5	80	10,5	B	00
C11.11.10080B01	100	76	58	40,5	80	10	B	01
C11.11.10080B02	100	76	58	40,5	80	5,5	B	02
C11.11.10080B03	100	76	58	40,5	80	5	B	03
C11.11.10080C00	100	76	58	40,5	80	10,5	C	00
C11.11.10080C01	100	76	58	40,5	80	10	C	01
C11.11.10080C02	100	76	58	40,5	80	5,5	C	02
C11.11.10080C03	100	76	58	40,5	80	5	C	03
C11.11.12090A00	120	96	78	50,5	90	10,5	A	00
C11.11.12090A01	120	96	78	50,5	90	10	A	01
C11.11.12090A02	120	96	78	50,5	90	5,5	A	02
C11.11.12090A03	120	96	78	50,5	90	5	A	03
C11.11.12090B00	120	96	78	50,5	90	10,5	B	00
C11.11.12090B01	120	96	78	50,5	90	10	B	01
C11.11.12090B02	120	96	78	50,5	90	5,5	B	02
C11.11.12090B03	120	96	78	50,5	90	5	B	03
C11.11.12090C00	120	96	78	50,5	90	10,5	C	00
C11.11.12090C01	120	96	78	50,5	90	10	C	01
C11.11.12090C02	120	96	78	50,5	90	5,5	C	02
C11.11.12090C03	120	96	78	50,5	90	5	C	03

C11.12

OMCR

LOCATING PIN - ZENTRIERBOLZEN - PERNO DI CENTRAGGIO

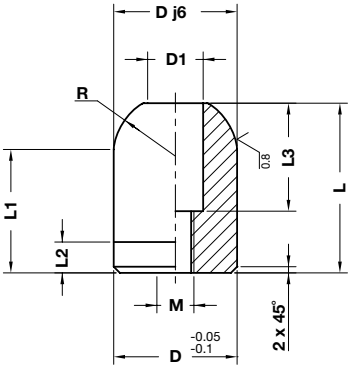

STOCK

3D WEB

Notes

Material: 16MnCr5 - **HRC:** 58÷60

Application example

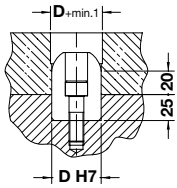

ORDER EXAMPLE	Art.	D=22	L=45
	C11.12.	22	45

OMCR CODE	D	D1	L	L1	L2	L3	M	R
C11.12.2245	22	14	45	37,5	8	25	10	12,5
C11.12.3250	32	18	50	40	10	35	12	20
C11.12.4055	40	18	55	40	10	35	12	20
C11.12.5055	50	18	55	40	10	35	12	20

C11.15

OMCR

LOCATING PIN - ZENTRIERBOLZEN - PERNO DI CENTRAGGIO

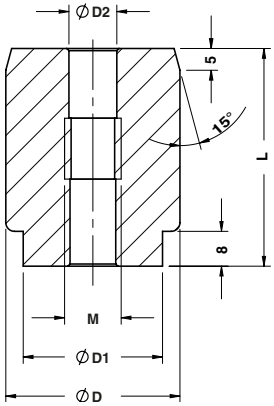

STOCK

3D WEB

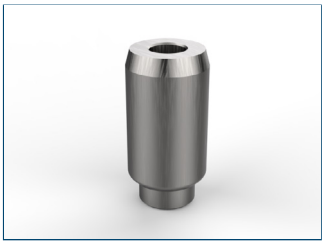

Notes

Material: 16MnCr5 - **HRC:** 58÷60

ORDER EXAMPLE	Art.	D=32	L=50
	C11.15.	32	50

OMCR CODE	D	D1	D2	L	M
C11.15.2550	25	18	11	50	M8
C11.15.3250	32	25	11	50	M8
C11.15.4050	40	32	15	50	M10
C11.15.5050	50	42	15	50	M10

LOCATING PIN - ZENTRIERBOLZEN - PERNO DI CENTRAGGIO

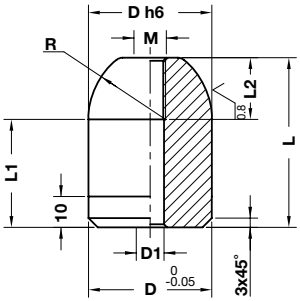

STOCK

3D WEB

Notes

Material: 16MnCr5 - **HRC:** 58÷60

Standard OMCR

ORDER EXAMPLE

Art.	D=22	L=45
C11.20.	22	45

OMCR CODE	D	D1	L	L1	L2	M	R
C11.20.2245	22	7	45	35	16	M8	15
C11.20.2255	22	7	55	45	16	M8	15
C11.20.3250	32	9	50	37,5	20	M10	20
C11.20.4055	40	9	55	35	20	M10	25
C11.20.4065	40	9	65	45	20	M10	25
C11.20.4085	40	9	85	65	20	M10	25
C11.20.5055	50	9	55	41,25	20	M10	25
C11.20.5680	56	9	80	60	20	M10	30

OMCR

VISUAL LOCATOR SETTING PUNCH - ENDKONTROLLSTEMPEL - PUNZONE DI VISUALIZZAZIONE

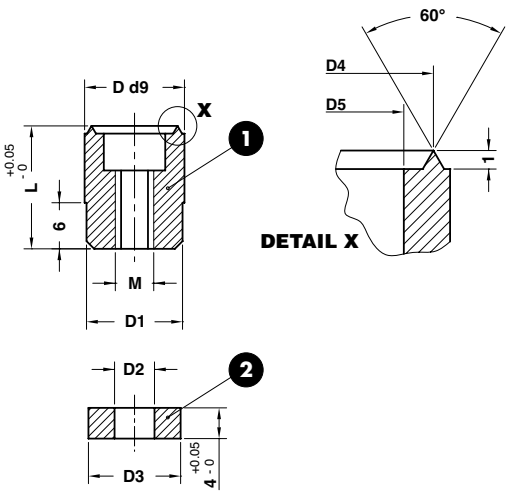

STOCK ... 3D WEB

Notes

1 **Material:** X205Cr12KU
HRC: 60÷62

2 **Material:** X205Cr12KU

ORDER EXAMPLE	Art.	D=10	L=16
	C11.30.	10	16

OMCR CODE	D	D1	D2	D3	D4	D5	L	M
C11.30.1016	10	9,5	4,2	9,7	8	6	16	M4
C11.30.1316	13	12,5	5,2	12	11,2	8	16	M5

VISUAL LOCATOR SETTING PUNCH - ENDKONTROLLSTEMPEL - PUNZONE DI VISUALIZZAZIONE

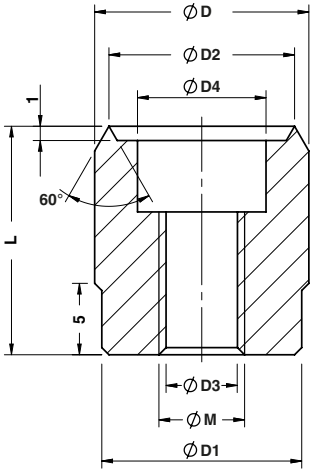

STOCK

3D WEB

Notes

Material: X155CrVNo121
HRC: 58÷60

ORDER EXAMPLE

Art.	D=18	L=16
C11.31.	18	16

OMCR CODE	D	D1	D2	D3	D4	L	M
C11.31.1316	13	12	11,8	5	8	16	M6
C11.31.1516	15	14	13	5	9	16	M6
C11.31.1816	18	17,5	16	7	11	16	M8
C11.31.2116	21	20,5	19	9	14	16	M10

C11.32

OMCR

ADJUSTMENT PLATE - SCHEIBE - RONDELLA DI REGISTRO

STOCK 3D WEB

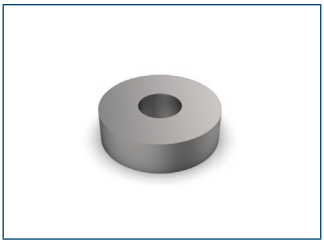

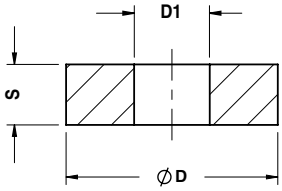

Notes

Material: 42CrMo4

ORDER EXAMPLE	Art.	D=17,5	S=4
	C11.32.	175	4

OMCR CODE	D	D1	S
C11.32.1203	12	5	3
C11.32.1404	14	5	4
C11.32.1754	17.5	7	4
C11.32.2054	20.5	9	4

C11.33

OMCR

VISUAL LOCATOR SETTING PUNCH - ENDKONTROLLSTEMPEL - PUNZONE DI VISUALIZZAZIONE

STOCK ... 3D WEB

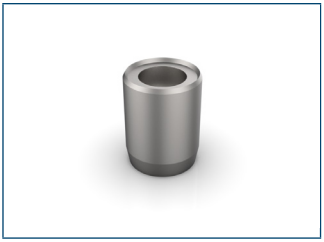

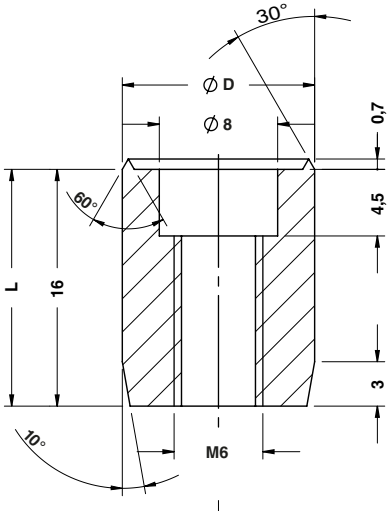

Notes

Material: X210Cr12 - **HRC:** 60÷62

ORDER EXAMPLE	Art.	D=13	L=16,7
	C11.33.	13	167

OMCR CODE	D	L
C11.33.13167	13	16,7

STAMP RETAINER - HALTEPLATTE - PORTATIMBRI

Notes

❶ ❷
Material: CK45

❸
ELASTIC PIN Ø2.5x14 DIN 1481

Application example

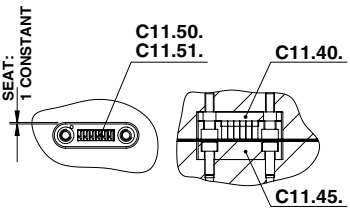

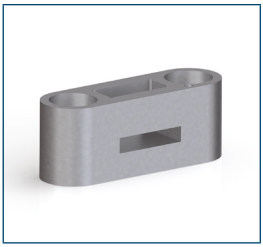

STOCK ... 3D WEB

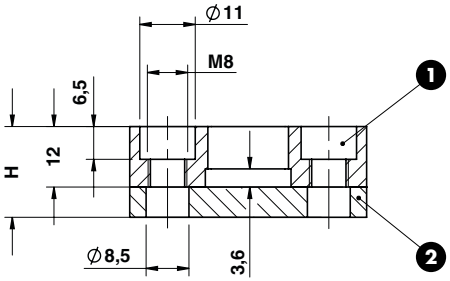

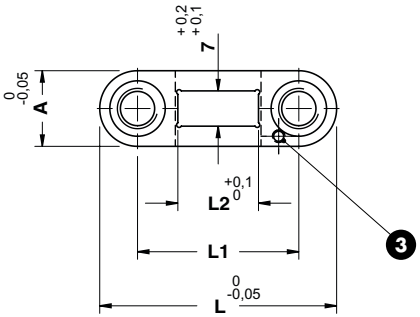

ORDER EXAMPLE	Art.	A=15	H=18	L=47
	C11.40.	15	18	047

OMCR CODE	A	H	L	L1	L2	Nr. of stamps C11.50.	Nr. of stamps C11.51.
C11.40.1518045	15	18	45	30	12	3	6
C11.40.1518047	15	18	47	32	16	4	8
C11.40.1518055	15	18	55	40	24	6	12
C11.40.1518063	15	18	63	48	32	8	16
C11.40.1518071	15	18	71	56	40	10	20

OMCR

BACKING PLATE - DRUCKPLATTE - REAZIONE

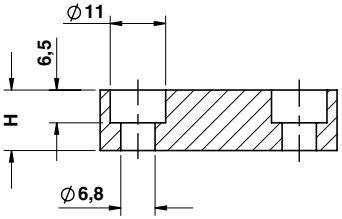

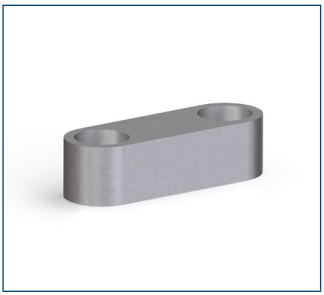

STOCK

3D WEB

Notes

Material: CK45

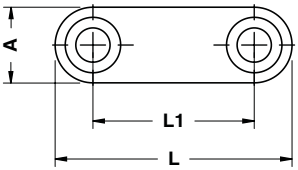

ORDER EXAMPLE

Art.	A=15	H=12	L=47
C11.45.	15	12	047

OMCR CODE	A	H	L	L1	Used with Stamp Retainer
C11.45.1512045	15	12	45	30	C11.40.1518045
C11.45.1512047	15	12	47	32	C11.40.1518047
C11.45.1512055	15	12	55	40	C11.40.1518055
C11.45.1512063	15	12	63	48	C11.40.1518063
C11.45.1512071	15	12	71	56	C11.40.1518071

OMCR

STAMP - BUCHSTABENSTEMPEL - PUNZONE MARCHIO

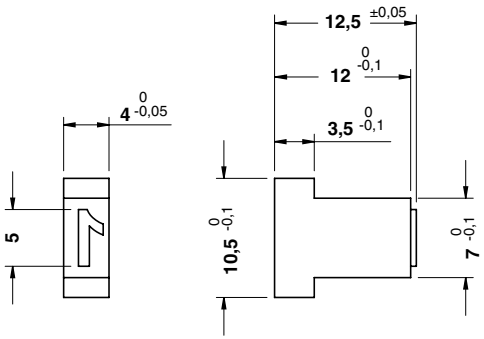

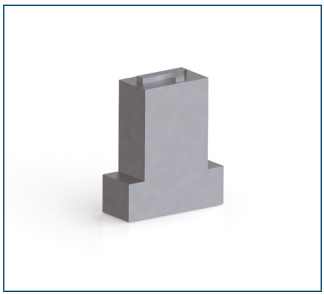

STOCK

3D WEB

Notes

Material: X153CrMoV12
HRC: 54÷56

ORDER EXAMPLE

Art.
C11.50.01

OMCR CODE	Stamp	OMCR CODE	Stamp	OMCR CODE	Stamp	OMCR CODE	Stamp
C11.50.00	0	C11.50.10	B	C11.50.20	L	C11.50.30	V
C11.50.01	1	C11.50.11	C	C11.50.21	M	C11.50.31	W
C11.50.02	2	C11.50.12	D	C11.50.22	N	C11.50.32	X
C11.50.03	3	C11.50.13	E	C11.50.23	O	C11.50.33	Y
C11.50.04	4	C11.50.14	F	C11.50.24	P	C11.50.34	Z
C11.50.05	5	C11.50.15	G	C11.50.25	Q	C11.50.35	SPACE
C11.50.06	6 or 9	C11.50.16	H	C11.50.26	R	C11.50.36	-
C11.50.07	7	C11.50.17	I	C11.50.27	S	C11.50.37	_
C11.50.08	8	C11.50.18	J	C11.50.28	T		
C11.50.09	A	C11.50.19	K	C11.50.29	U		

STAMP - BUCHSTABENSTEMPEL - PUNZONE MARCHIO

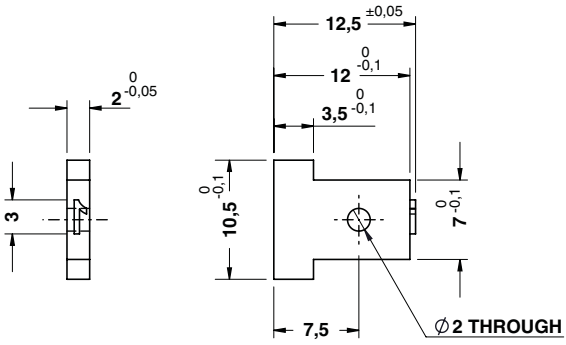

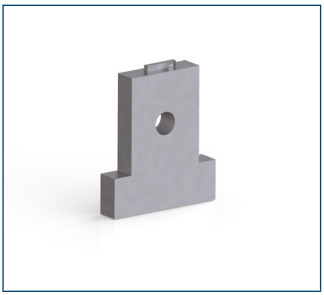

STOCK

3D WEB

Notes

Material: X153CrMoV12
HRC: 54÷56

ORDER EXAMPLE

Art.
C11.51.01

OMCR CODE	Stamp	OMCR CODE	Stamp	OMCR CODE	Stamp	OMCR CODE	Stamp
C11.51.00	0	C11.51.10	B	C11.51.20	L	C11.51.30	V
C11.51.01	1	C11.51.11	C	C11.51.21	M	C11.51.31	W
C11.51.02	2	C11.51.12	D	C11.51.22	N	C11.51.32	X
C11.51.03	3	C11.51.13	E	C11.51.23	O	C11.51.33	Y
C11.51.04	4	C11.51.14	F	C11.51.24	P	C11.51.34	Z
C11.51.05	5	C11.51.15	G	C11.51.25	Q	C11.51.35	SPACE
C11.51.06	6 or 9	C11.51.16	H	C11.51.26	R	C11.51.36	-
C11.51.07	7	C11.51.17	I	C11.51.27	S	C11.51.37	_
C11.51.08	8	C11.51.18	J	C11.51.28	T		
C11.51.09	A	C11.51.19	K	C11.51.29	U		

OMCR

AIR PIN - DRUCKBOLZEN - CANDELA

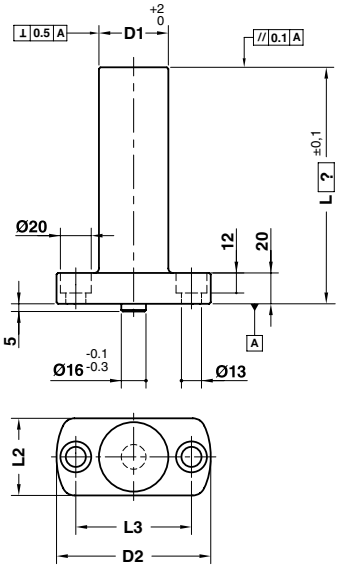

WEB

Lmax = 360 mm

Respect the max. load
Maximale Nutzlast beachten
Rispettare il carico max.

Notes

Material: CK45 - 800÷1000 N/mm²

ORDER EXAMPLE

Art.	D1=36	L=230
C12.10.	36	230

OMCR CODE	D1	D2	L2	L3	Max load (kN)
C12.10.	36	90	40	65	50
C12.10.	45	100	50	75	70

OMCR

AIR PIN - UNTERLUFTBOLZEN - CANDELA

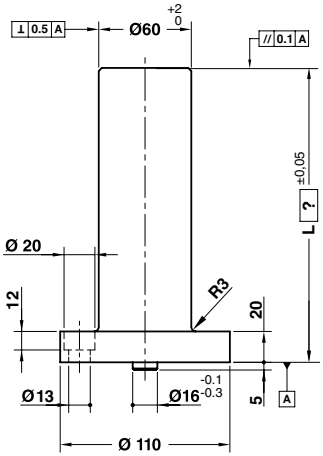

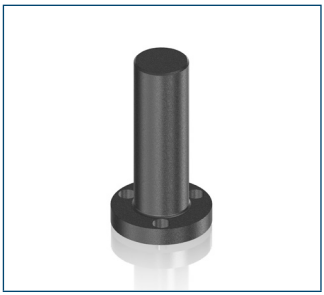

10 3D WEB

Lmax = 450 mm

Respect the max. load
Maximale Nutzlast beachten
Rispettare il carico max.

Notes

Material: CK45 - 800÷1000 N/mm²

TYPE 01

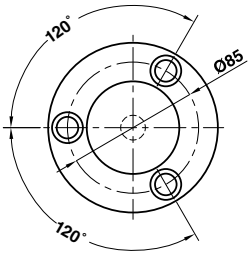

TYPE 02

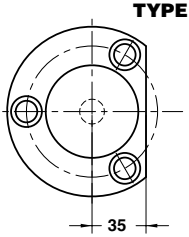

Application example

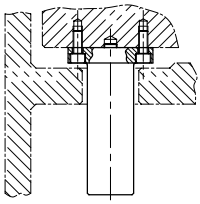

ORDER EXAMPLE	Art.	TYPE	L=220
	C12.11.	01	220

OMCR CODE	TYPE	Max Load (kN)
C12.11.	01	80
C12.11.	02	80

OMCR

AIR PIN - UNTERLUFTBOLZEN - CANDELA

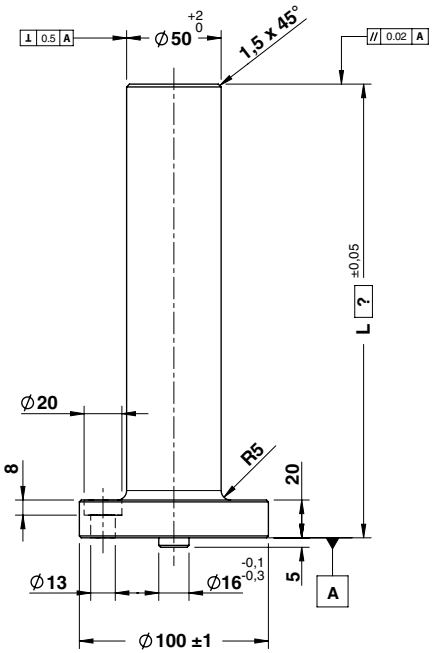

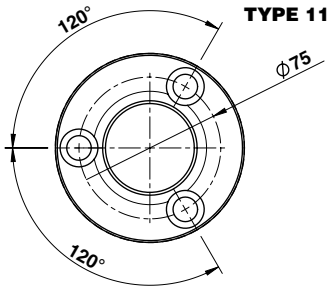

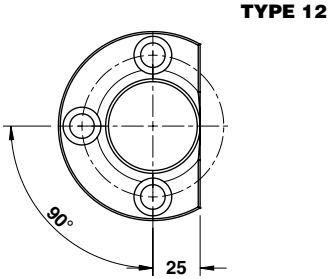

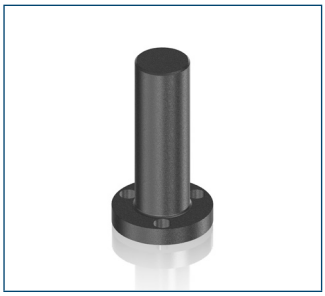

10 WEB

Lmax = 450 mm

Respect the max. load
Maximale Nutzlast beachten
Rispettare il carico max.

Notes

Material: CK45 - 800÷1000 N/mm²

Application example

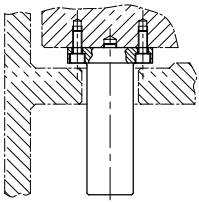

ORDER EXAMPLE	Art.	TYPE	L=220
	C12.11.	11	220

OMCR CODE	TYPE	Max Load (kN)
C12.11.	11	80
C12.11.	12	80

AIR PIN VDI 3002 - DRUCKBOLZEN VDI 3002 - CANDELA VDI 3002

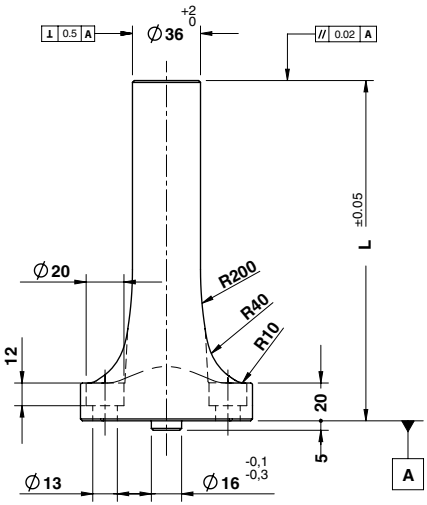

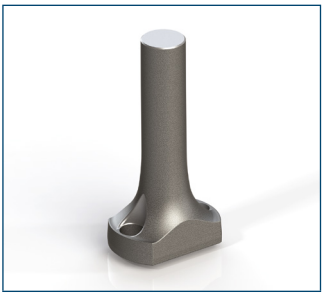

STOCK

WEB

Respect the max. load
Maximale Nutzlast beachten
Rispettare il carico max.

Notes

Material: CK45
800÷1000 N/mm²

TYPE 10

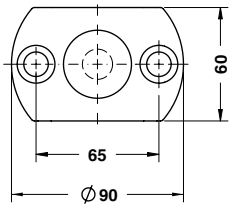

ORDER EXAMPLE

Art.	TYPE	L=220
C12.12.	10	220

OMCR CODE	TYPE	L	Max Load (kN)
C12.12.10150	10	150	50
C12.12.10155	10	155	50
C12.12.10160	10	160	50
C12.12.10165	10	165	50
C12.12.10170	10	170	50
C12.12.10175	10	175	50
C12.12.10180	10	180	50
C12.12.10185	10	185	50
C12.12.10190	10	190	50
C12.12.10195	10	195	50
C12.12.10200	10	200	50
C12.12.10205	10	205	50
C12.12.10210	10	210	50

OMCR CODE	TYPE	L	Max Load (kN)
C12.12.10215	10	215	50
C12.12.10220	10	220	50
C12.12.10225	10	225	50
C12.12.10230	10	230	50
C12.12.10235	10	235	50
C12.12.10240	10	240	50
C12.12.10245	10	245	50
C12.12.10250	10	250	50
C12.12.10255	10	255	50
C12.12.10260	10	260	50
C12.12.10265	10	265	50
C12.12.10270	10	270	50
C12.12.10275	10	275	50

OMCR CODE	TYPE	L	Max Load (kN)
C12.12.10280	10	280	50
C12.12.10285	10	285	50
C12.12.10290	10	290	50
C12.12.10295	10	295	50
C12.12.10300	10	300	50
C12.12.10310	10	310	50
C12.12.10320	10	320	50
C12.12.10330	10	330	50
C12.12.10340	10	340	50
C12.12.10350	10	350	50
C12.12.10360	10	360	50

OMCR

AIR PIN VDI 3002 - DRUCKBOLZEN VDI 3002 - CANDELA VDI 3002

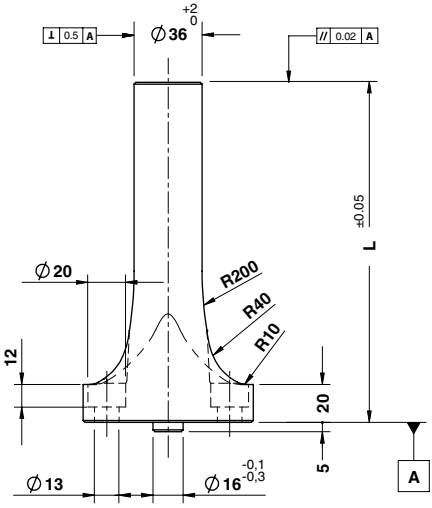

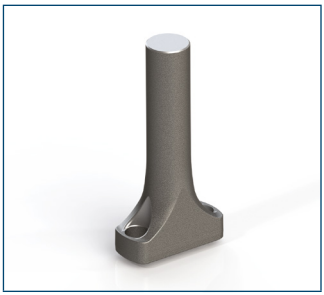

STOCK

WEB

Respect the max. load
Maximale Nutzlast beachten
Rispettare il carico max.

Notes

Material: CK45
800÷1000 N/mm²

TYPE 11

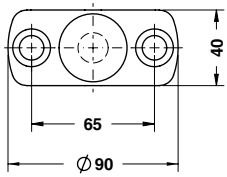

ORDER EXAMPLE

Art.	TYPE	L=220
C12.12.	11	220

OMCR CODE	TYPE	L	Max Load (kN)
C12.12.11150	11	150	50
C12.12.11155	11	155	50
C12.12.11160	11	160	50
C12.12.11165	11	165	50
C12.12.11170	11	170	50
C12.12.11175	11	175	50
C12.12.11180	11	180	50
C12.12.11185	11	185	50
C12.12.11190	11	190	50
C12.12.11195	11	195	50
C12.12.11200	11	200	50
C12.12.11205	11	205	50
C12.12.11210	11	210	50

OMCR CODE	TYPE	L	Max Load (kN)
C12.12.11215	11	215	50
C12.12.11220	11	220	50
C12.12.11225	11	225	50
C12.12.11230	11	230	50
C12.12.11235	11	235	50
C12.12.11240	11	240	50
C12.12.11245	11	245	50
C12.12.11250	11	250	50
C12.12.11255	11	255	50
C12.12.11260	11	260	50
C12.12.11265	11	265	50
C12.12.11270	11	270	50
C12.12.11275	11	275	50

OMCR CODE	TYPE	L	Max Load (kN)
C12.12.11280	11	280	50
C12.12.11285	11	285	50
C12.12.11290	11	290	50
C12.12.11295	11	295	50
C12.12.11300	11	300	50
C12.12.11310	11	310	50
C12.12.11320	11	320	50
C12.12.11330	11	330	50
C12.12.11340	11	340	50
C12.12.11350	11	350	50
C12.12.11360	11	360	50

OMCR

AIR PIN VDI 3002 - DRUCKBOLZEN VDI 3002 - CANDELA VDI 3002

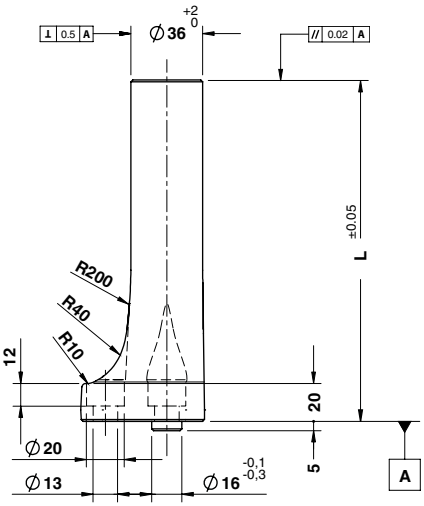

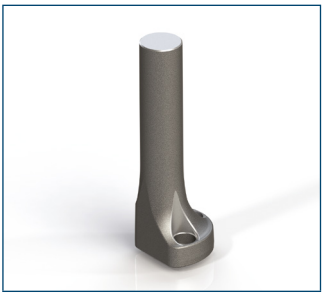

STOCK WEB

Respect the max. load
Maximale Nutzlast beachten
Rispettare il carico max.

Notes

Material: CK45
800÷1000 N/mm²

TYPE 12

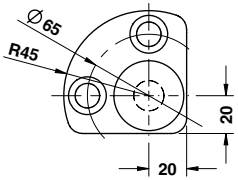

ORDER EXAMPLE	Art.	TYPE	L=220
	C12.12.	12	220

OMCR CODE	TYPE	L	Max Load (kN)
C12.12.12150	12	150	50
C12.12.12155	12	155	50
C12.12.12160	12	160	50
C12.12.12165	12	165	50
C12.12.12170	12	170	50
C12.12.12175	12	175	50
C12.12.12180	12	180	50
C12.12.12185	12	185	50
C12.12.12190	12	190	50
C12.12.12195	12	195	50
C12.12.12200	12	200	50
C12.12.12205	12	205	50
C12.12.12210	12	210	50

OMCR CODE	TYPE	L	Max Load (kN)
C12.12.12215	12	215	50
C12.12.12220	12	220	50
C12.12.12225	12	225	50
C12.12.12230	12	230	50
C12.12.12235	12	235	50
C12.12.12240	12	240	50
C12.12.12245	12	245	50
C12.12.12250	12	250	50
C12.12.12255	12	255	50
C12.12.12260	12	260	50
C12.12.12265	12	265	50
C12.12.12270	12	270	50
C12.12.12275	12	275	50

OMCR CODE	TYPE	L	Max Load (kN)
C12.12.12280	12	280	50
C12.12.12285	12	285	50
C12.12.12290	12	290	50
C12.12.12295	12	295	50
C12.12.12300	12	300	50
C12.12.12310	12	310	50
C12.12.12320	12	320	50
C12.12.12330	12	330	50
C12.12.12340	12	340	50
C12.12.12350	12	350	50
C12.12.12360	12	360	50

AIR PIN VDI 3002 - DRUCKBOLZEN VDI 3002 - CANDELA VDI 3002

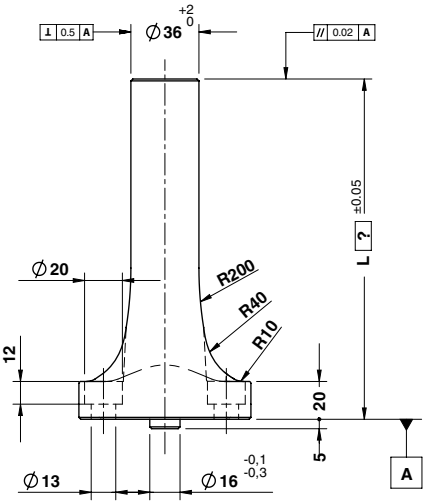

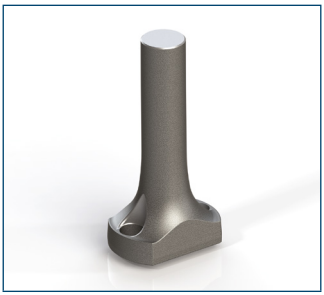

10 WEB

Lmax = 360 mm

Respect the max. load
Maximale Nutzlast beachten
Rispettare il carico max.

Notes

Material: C45
800÷1000 N/mm²

ORDER EXAMPLE	Art.	TYPE	L=220
	C12.12.	10	220

OMCR CODE	TYPE	Max Load (kN)
C12.12.	10	50
C12.12.	11	50
C12.12.	12	50

TYPE 10

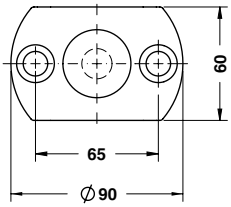

TYPE 11

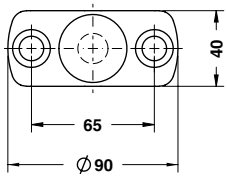

TYPE 12

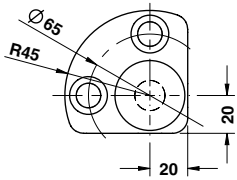

SPACER PLATE TOOTHED - DISTANZPLATTE GEZAHNT - TASSELLO DI COMPENSAZIONE

Notes

1 2 3
Material: 90MnCrV8
HRC: 58÷60

4 **Material:** X155CrVMo12

5 DIN 912

Application example

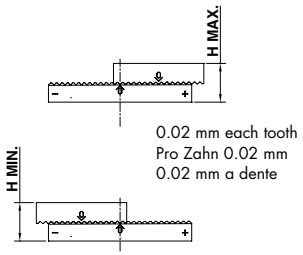

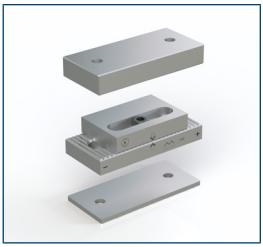

STOCK ... 3D WEB

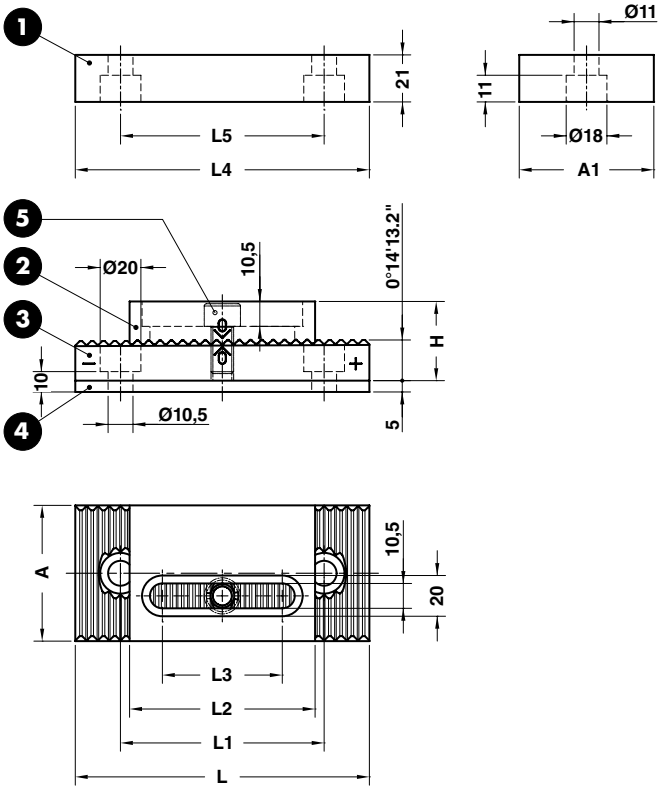

ORDER EXAMPLE	Art.	A=60	H=35	L=130
	C12.16.	060	35	130

OMCR CODE	A	A1	H	H min.	H max.	L	L1	L2	L3	L4	L5
C12.16.06035130	60	60	35	34,88	35,12	130	90	90	61	130	90
C12.16.08035160	80	80	35	34,86	35,14	160	120	110	71	160	120

C12.20

OMCR

COMPENSATION BLOCK - ABSTANDSBLOCK - TASSELLO DI COMPENSAZIONE

STOCK

3D WEB

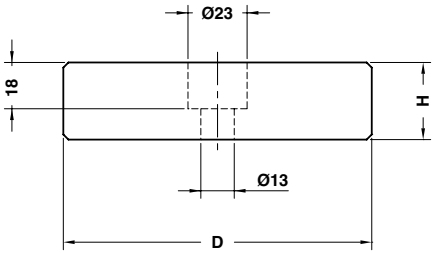

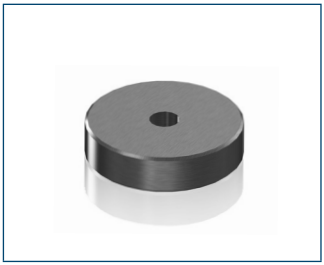

Notes

Material: 42CrMo4 - **HRC:** 46÷48

ORDER EXAMPLE

Art.	D=80	H=25
C12.20.	080	25

OMCR CODE	D	H
C12.20.08025	80	25
C12.20.08030	80	30
C12.20.10025	100	25
C12.20.10030	100	30
C12.20.12025	120	25
C12.20.12030	120	30

C12.21

OMCR

SHIM - AUSGLEICHSCHEIB - SPESSORE

STOCK

3D WEB

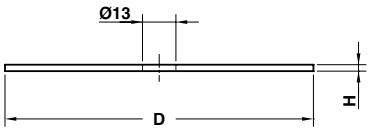

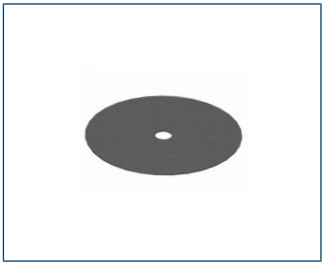

Notes

Material: CK45

ORDER EXAMPLE

Art.	D=80	H=0,5
C12.21.	080	05

OMCR CODE	D	H	Material
C12.21.08001	80	0,1	BRASS
C12.21.08005	80	0,5	STEEL
C12.21.10001	100	0,1	BRASS
C12.21.10005	100	0,5	STEEL
C12.21.12001	120	0,1	BRASS
C12.21.12005	120	0,5	STEEL

OMCR

PRESSURE PLATE - DRUCKPLATTE - PIASTRA DI REAZIONE

STOCK

3D WEB

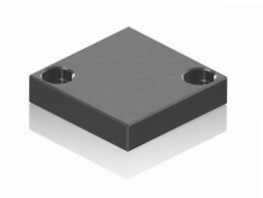

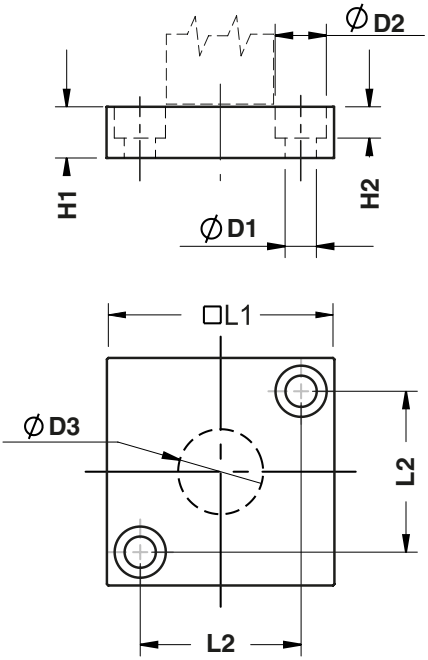

Notes

Material: 16MnCr5 - **HRC:** 58÷60

ORDER EXAMPLE

Art.	L1=60	H1=15
C12.22.	060	15

OMCR CODE	L1	L2	D1	D2	D3	H1	H2
C12.22.04012	40	24	7	11	≤ 20	12	7
C12.22.06015	60	40	9	15	≤ 36	15	9
C12.22.07015	70	50	9	15	≤ 50	15	9
C12.22.08018	80	56,5	11	18	≤ 65	18	11
C12.22.10020	100	74	11	18	≤ 80	20	11
C12.22.14020	140	110	11	18	≤ 95	20	11

PRESSURE PLATE - DRUCKPLATTE - PIASTRA DI REAZIONE

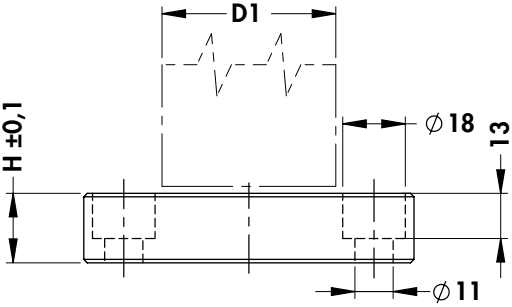

STOCK

3D WEB

Notes

Material: 16MnCr5 - **HRC:** 58÷60

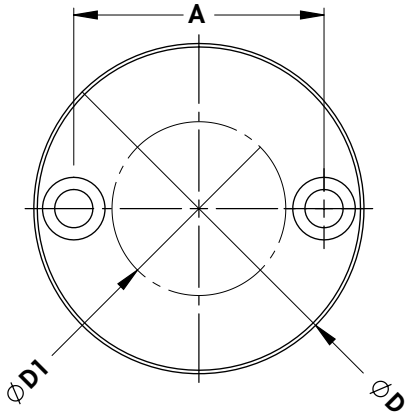

FORM A

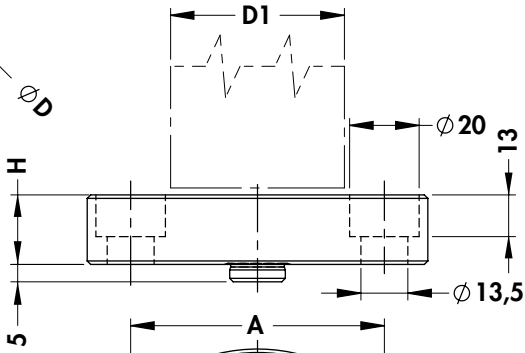

FORM B

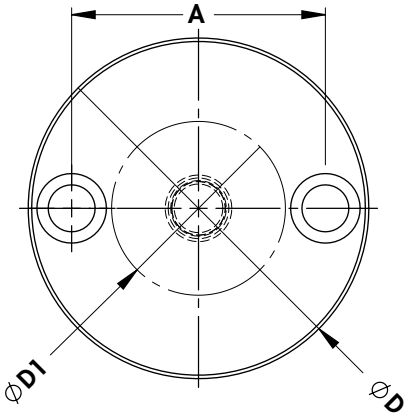

ORDER EXAMPLE	Art.	D=95	H=20
	C12.23.	095	20

OMCR CODE	A	D	D1	H	FORM
C12.23.06520	42	65	≤ 25	20	A
C12.23.09520	72	95	≤ 50	20	A
C12.23.09820	73	98	≤ 50	20	B
C12.23.11320	88	113	≤ 60	20	B
C12.23.12820	103	128	≤ 75	20	B
C12.23.14320	118	143	≤ 95	20	B

OMCR

PRESSURE PLATE - DRUCKPLATTE - PIASTRA DI REAZIONE

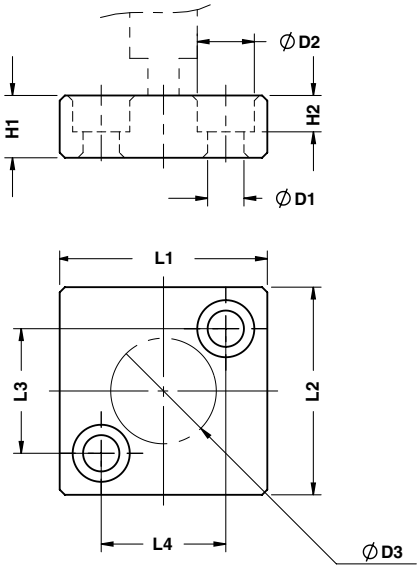

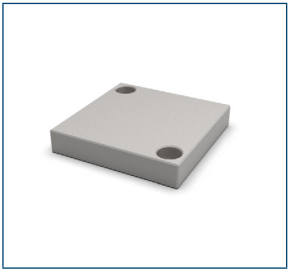

STOCK

3D WEB

Notes

Material: 90MnCrV8
HRC: 50÷52

ORDER EXAMPLE	Art.	L1=100	L2=80	H1=20
	C12.24.	100	080	20

OMCR CODE	L1	L2	L3	L4	H1	H2	D1	D2	D3
C12.24.04004012	40	40	24	24	12	7	7	11	≤ 20
C12.24.04004015	40	40	21	21	15	10	9	15	≤ 15
C12.24.05002512	50	25	8	32	12	7	7	11	≤ 15
C12.24.05003012	50	30	14	35	12	7	7	11	≤ 20
C12.24.05605620	56	56	32	32	20	13	11	18	≤ 25
C12.24.06006012	60	60	38	38	12	9	9	15	≤ 36
C12.24.06006015	60	60	40	40	15	9	9	15	≤ 36
C12.24.07003515	70	35	14	48	15	9	9	15	≤ 25
C12.24.07005015	70	50	30	56	15	9	9	15	≤ 36
C12.24.07007015	70	70	50	50	15	9	9	15	≤ 50
C12.24.07107120	71	71	48	48	20	13	11	18	≤ 50
C12.24.08506015	80	60	40	56	15	9	9	15	≤ 50
C12.24.09009012	90	90	70	70	12	9	9	15	≤ 75
C12.24.09009020	90	90	67	67	20	13	11	18	≤ 65
C12.24.10008020	100	80	56	72	20	11	11	18	≤ 65
C12.24.10010012	100	100	81	81	12	9	9	15	≤ 90
C12.24.10010020	100	100	74	74	20	11	11	18	≤ 80
C12.24.11010020	110	100	75	85	20	11	11	18	≤ 95
C12.24.11011020	110	110	84	84	20	11	11	18	≤ 95
C12.24.14014020	140	140	110	110	20	13	11	18	≤ 95

OMCR

BALANCE BLOCK - DISTANZSTÜCK - DISTANZIALE

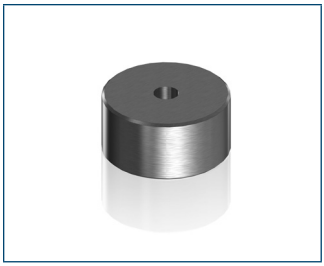

STOCK

3D WEB

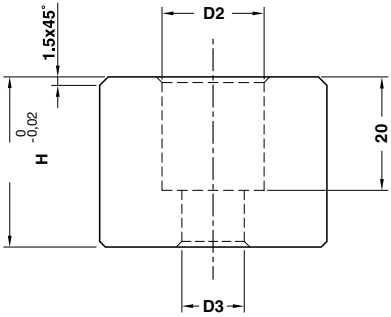

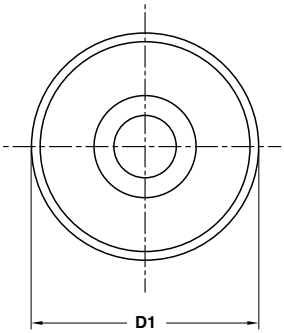

Notes

Material: CK45

ORDER EXAMPLE

Art.	D1=40	H=30
C12.25.	040	30

OMCR CODE	D1	D2	D3	H
C12.25.04030	40	18	11	30
C12.25.06050	60	20	13,5	50
C12.25.10050	100	20	13,5	50

MCR

BALANCE BLOCK - DISTANZSTÜCK - DISTANZIALE

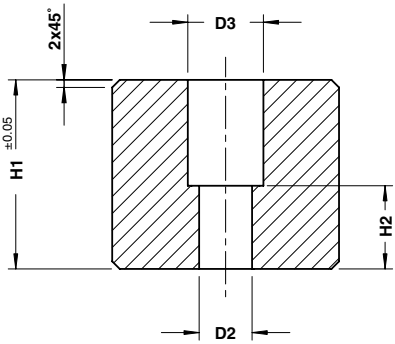

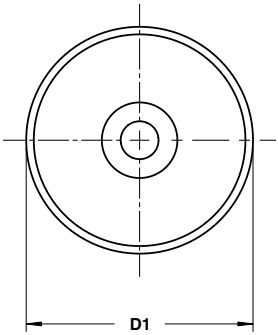

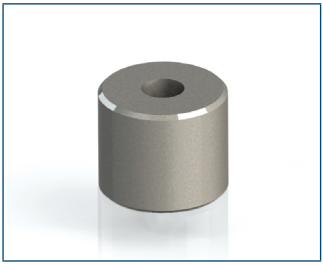

STOCK

3D WEB

Respect the max. load
Maximale Nutzlast beachten
Rispettare il carico max.

Notes

Material: CK45

Screws not included

Unpainted

ORDER EXAMPLE

Art.	D1=60	H1=40,50
C12.26.	060	04050

BALANCE BLOCK - DISTANZSTÜCK - DISTANZIALE

D1	25		30		40		50		60			80			100		120		150	
D2	9		9		9		9		14			14			18		22		22	
D3	15		15		15		15		20			20			26		33		33	
Max load (t)	3,5		8		20		35		55			100			170		250		400	
H2	10	28	10	28	10	28	10	28	12	22	42	12	22	42	20	36	15	30	15	30
Screw DIN EN ISO 4762	M8x25	M8x40	M8x25	M8x40	M8x25	M8x40	M8x25	M8x40	M12x30	M12x40	M12x60	M12x30	M12x40	M12x60	M16x40	M16x60	M20x50	M20x60	M20x50	M20x60
H1																				
20	•		•		•		•													
20,3	•		•		•		•													
20,5	•		•		•		•													
23	•		•		•		•													
25	•		•		•		•		•											
28	•		•		•		•		•											
30	•		•		•		•		•			•								
30,3	•		•		•		•		•			•								
30,5	•		•		•		•		•			•								
33	•		•		•		•		•			•								
35	•		•		•		•		•			•								
38	•		•		•		•		•			•								
40	•		•		•		•			•			•		•					
40,3		•		•		•		•		•			•		•					
40,5		•		•		•		•		•			•		•					
41				•		•		•		•			•		•					
43				•		•		•		•			•		•					
45				•		•		•		•			•		•					
48				•		•		•		•			•		•					
50				•		•		•		•			•		•		•		•	
50,3				•		•		•		•			•		•		•		•	
50,5				•		•		•		•			•		•		•		•	
51						•		•		•			•		•		•		•	
55						•		•		•			•		•		•		•	
60						•		•		•			•		•		•		•	
60,3						•		•			•			•		•		•		•
60,5						•		•			•			•		•		•		•
61											•			•		•		•		•

OMCR

BALANCE BLOCK - DISTANZSTÜCK - DISTANZIALE

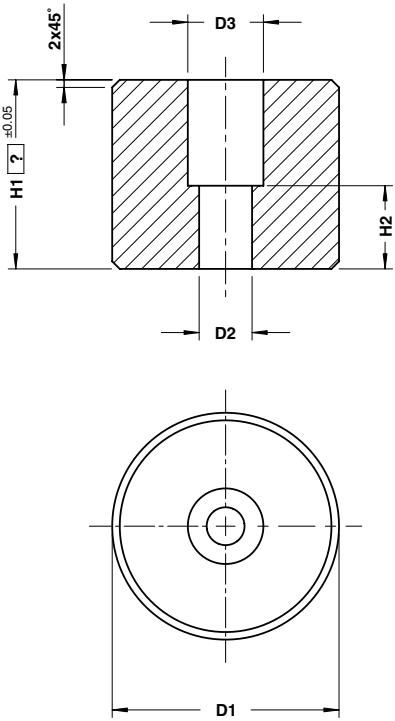

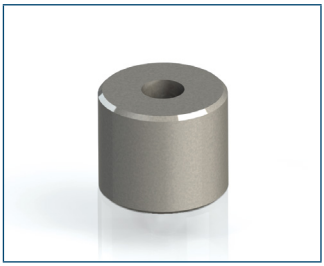

10 3D WEB

Respect the max. load
Maximale Nutzlast beachten
Rispettare il carico max.

Notes

Material: CK45

Screws not included

Unpainted

ORDER EXAMPLE	Art.	D1=80	H1=45
	C12.26.	080	04500

OMCR CODE	D1	D2	D3	H1	H2	Screw DIN EN ISO 4762	Max load (t)
C12.26.	25	9	15	≥ 20 - 40	10	M8x25	3,5
C12.26.	25	9	15	> 40 - 60	28	M8x40	3,5
C12.26.	30	9	15	≥ 20 - 40	10	M8x25	8
C12.26.	30	9	15	> 40 - 60	28	M8x40	8
C12.26.	40	9	15	≥ 20 - 40	10	M8x25	20
C12.26.	40	9	15	> 40 - 60	28	M8x40	20
C12.26.	50	9	15	≥ 20 - 40	10	M8x25	35
C12.26.	50	9	15	> 40 - 60	28	M8x40	35

OMCR

BALANCE BLOCK - DISTANZSTÜCK - DISTANZIALE

OMCR CODE	D1	D2	D3	H1	H2	Screw DIN EN ISO 4762	Max load (t)
C12.26.	60	14	20	≥ 25 < 40	12	M12x30	55
C12.26.	60	14	20	≥ 40 - 60	22	M12x40	55
C12.26.	60	14	20	> 60 - 80	42	M12x60	55
C12.26.	60	14	20	> 80 - 100	62	M12x80	55
C12.26.	60	14	20	> 100 - 120	82	M12x100	55
C12.26.	60	14	20	> 120 - 140	102	M12x120	55
C12.26.	60	14	20	> 140 - 160	122	M12x140	55
C12.26.	80	14	20	≥ 25 < 40	12	M12x30	100
C12.26.	80	14	20	≥ 40 - 60	20	M12x40	100
C12.26.	80	14	20	> 60 - 80	36	M12x60	100
C12.26.	80	14	20	> 80 - 100	56	M12x80	100
C12.26.	80	14	20	> 100 - 120	76	M12x100	100
C12.26.	80	14	20	> 120 - 140	96	M12x120	100
C12.26.	80	14	20	> 140 - 160	116	M12x140	100
C12.26.	100	18	26	≥ 40 - 60	20	M16x40	170
C12.26.	100	18	26	> 60 - 80	36	M16x60	170
C12.26.	100	18	26	> 80 - 100	56	M16x80	170
C12.26.	100	18	26	> 100 - 120	76	M16x100	170
C12.26.	100	18	26	> 120 - 140	96	M16x120	170
C12.26.	100	18	26	> 140 - 160	116	M16x140	170
C12.26.	120	22	33	≥ 40 - 60	15	M20x40	250
C12.26.	120	22	33	> 60 - 80	30	M20x60	250
C12.26.	120	22	33	> 80 - 100	50	M20x80	250
C12.26.	120	22	33	> 100 - 120	70	M20x100	250
C12.26.	120	22	33	> 120 - 140	90	M20x120	250
C12.26.	120	22	33	> 140 - 160	110	M20x140	250
C12.26.	150	22	33	≥ 40 - 60	15	M20x40	400
C12.26.	150	22	33	> 60 - 80	30	M20x60	400
C12.26.	150	22	33	> 80 - 100	50	M20x80	400
C12.26.	150	22	33	> 100 - 120	70	M20x100	400
C12.26.	150	22	33	> 120 - 140	90	M20x120	400
C12.26.	150	22	33	> 140 - 160	110	M20x140	400

MCR

BALANCE BLOCK - DISTANZSTÜCK - DISTANZIALE

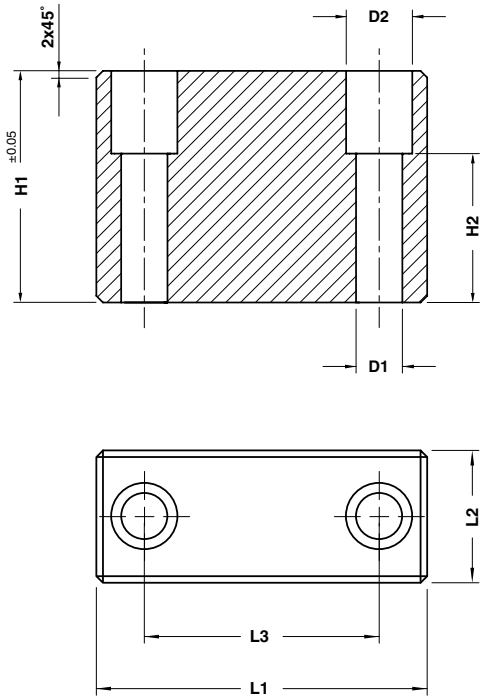

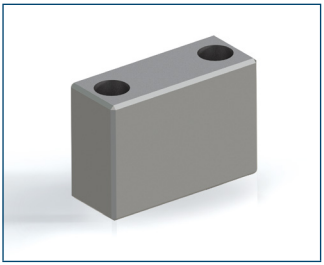

STOCK

3D WEB

Respect the max. load
Maximale Nutzlast beachten
Rispettare il carico max.

Notes

Material: CK45

Screws not included

Unpainted

ORDER EXAMPLE

Art.	L1=60	L2=40	H1=60,5
C12.27.	060	040	06050

OMCR

BALANCE BLOCK - DISTANZSTÜCK - DISTANZIALE

L1 x L2	60 x 40			80 x 40			100 x 40			100 x 50			120 x 60			150 x 80		160 x 100	
D1	9			11			14			14			14			18		18	
D2	15			18			20			20			20			26		26	
Max load (t)	50			65			85			110			160			270		380	
L3	40			56			71			76			93			120		130	
H2	10	28	48	8	25	45	6	22	42	6	22	42	6	22	42	18	38	18	38
Screw DIN EN ISO 4762	M8x25	M8x40	M8x60	M10x25	M10x40	M10x60	M12x25	M12x40	M12x60	M12x25	M12x40	M12x60	M12x25	M12x40	M12x60	M16x40	M16x60	M16x40	M16x60
H1																			
20	•			•															
20,3	•			•															
20,5	•			•															
23	•			•															
25	•			•			•												
28	•			•			•												
30	•			•			•			•									
30,3	•			•			•			•									
30,5	•			•			•			•									
33	•			•			•			•									
35	•			•			•			•									
38	•			•			•			•									
40	•			•			•			•			•			•		•	
40,3		•			•			•			•			•		•		•	
40,5		•			•			•			•			•		•		•	
41		•			•			•			•			•		•		•	
43		•			•			•			•			•		•		•	
45		•			•			•			•			•		•		•	
48		•			•			•			•			•		•		•	
50		•			•			•			•			•		•		•	
50,3		•			•			•			•			•		•		•	
50,5		•			•			•			•			•		•		•	
51		•			•			•			•			•		•		•	
55		•			•			•			•			•		•		•	
60		•			•			•			•			•		•		•	
60,5			•			•			•			•			•		•		•
61									•			•			•		•		•

OMCR

BALANCE BLOCK - DISTANZSTÜCK - DISTANZIALE

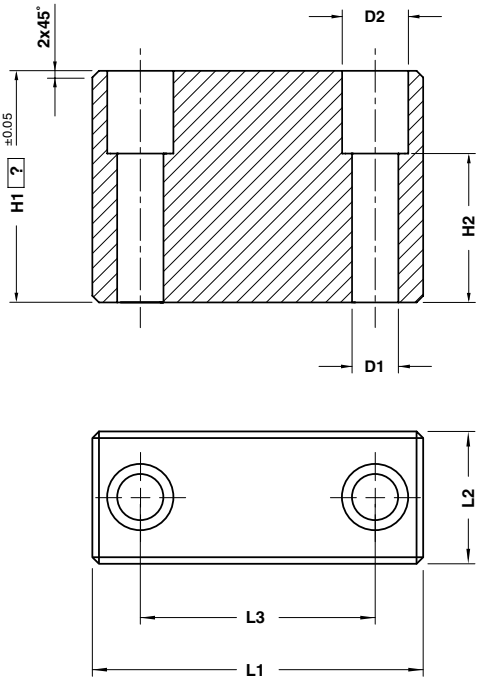

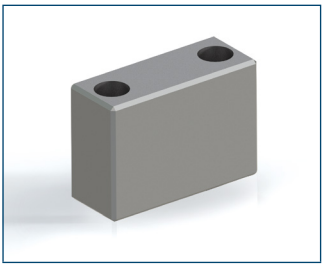

10 3D WEB

Respect the max. load
Maximale Nutzlast beachten
Rispettare il carico max.

Notes

Material: CK45

Screws not included

Unpainted

ORDER EXAMPLE

Art.	L1=150	L2=80	H1=85
C12.27.	150	080	08500

OMCR CODE	D1	D2	H1	H2	L1	L2	L3	Screw DIN EN ISO 4762	Max load (t)
C12.27.	9	15	≥ 20 - 40	10	60	40	40	M8x25	50
C12.27.	9	15	> 40 - 60	28	60	40	40	M8x40	50
C12.27.	9	15	> 60 - 80	48	60	40	40	M8x60	50
C12.27.	9	15	> 80 - 100	68	60	40	40	M8x80	50
C12.27.	9	15	> 100 - 120	68	60	40	40	M8x80	50
C12.27.	9	15	> 120 - 140	68	60	40	40	M8x80	50
C12.27.	9	15	> 140 - 160	68	60	40	40	M8x80	50
C12.27.	11	18	≥ 20 - 40	8	80	40	56	M10x25	65
C12.27.	11	18	> 40 - 60	25	80	40	56	M10x40	65
C12.27.	11	18	> 60 - 80	45	80	40	56	M10x60	65
C12.27.	11	18	> 80 - 100	65	80	40	56	M10x80	65
C12.27.	11	18	> 100 - 120	85	80	40	56	M10x100	65
C12.27.	11	18	> 120 - 140	105	80	40	56	M10x120	65
C12.27.	11	18	> 140 - 160	105	80	40	56	M10x120	65
C12.27.	14	20	≥ 20 - 40	6	100	40	71	M12x25	85
C12.27.	14	20	> 40 - 60	22	100	40	71	M12x40	85
C12.27.	14	20	> 60 - 80	42	100	40	71	M12x60	85
C12.27.	14	20	> 80 - 100	62	100	40	71	M12x80	85
C12.27.	14	20	> 100 - 120	82	100	40	71	M12x100	85
C12.27.	14	20	> 120 - 140	102	100	40	71	M12x120	85

OMCR

BALANCE BLOCK - DISTANZSTÜCK - DISTANZIALE

OMCR CODE	D1	D2	H1	H2	L1	L2	L3	Screw DIN EN ISO 4762	Max load (t)
C12.27.	14	20	> 140 - 160	122	100	40	71	M12x140	85
C12.27.	14	20	≥ 20 - 40	6	100	50	76	M12x25	110
C12.27.	14	20	> 40 - 60	22	100	50	76	M12x40	110
C12.27.	14	20	> 60 - 80	42	100	50	76	M12x60	110
C12.27.	14	20	> 80 - 100	62	100	50	76	M12x80	110
C12.27.	14	20	> 100 - 120	82	100	50	76	M12x100	110
C12.27.	14	20	> 120 - 140	102	100	50	76	M12x120	110
C12.27.	14	20	> 140 - 160	122	100	50	76	M12x140	110
C12.27.	14	20	≥ 20 - 40	6	120	60	93	M12x25	160
C12.27.	14	20	> 40 - 60	22	120	60	93	M12x40	160
C12.27.	14	20	> 60 - 80	42	120	60	93	M12x60	160
C12.27.	14	20	> 80 - 100	62	120	60	93	M12x80	160
C12.27.	14	20	> 100 - 120	82	120	60	93	M12x100	160
C12.27.	14	20	> 120 - 140	102	120	60	93	M12x120	160
C12.27.	14	20	> 140 - 160	122	120	60	93	M12x140	160
C12.27.	18	26	> 40 - 60	18	150	80	120	M16x40	270
C12.27.	18	26	> 60 - 80	38	150	80	120	M16x60	270
C12.27.	18	26	> 80 - 100	58	150	80	120	M16x80	270
C12.27.	18	26	> 100 - 120	78	150	80	120	M16x100	270
C12.27.	18	26	> 120 - 140	98	150	80	120	M16x120	270
C12.27.	18	26	> 140 - 160	118	150	80	120	M16x140	270
C12.27.	18	26	> 40 - 60	18	160	100	130	M16x40	380
C12.27.	18	26	> 60 - 80	38	160	100	130	M16x60	380
C12.27.	18	26	> 80 - 100	58	160	100	130	M16x80	380
C12.27.	18	26	> 100 - 120	78	160	100	130	M16x100	380
C12.27.	18	26	> 120 - 140	98	160	100	130	M16x120	380
C12.27.	18	26	> 140 - 160	118	160	100	130	M16x140	380

OMCR

BALANCE BLOCK - DISTANZSTÜCK - DISTANZIALE

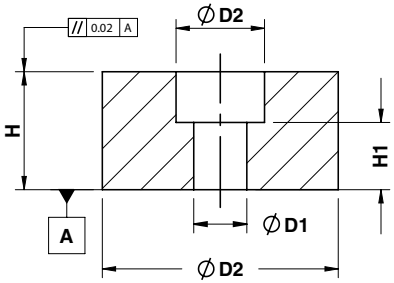

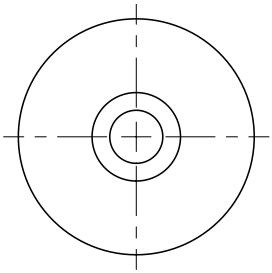

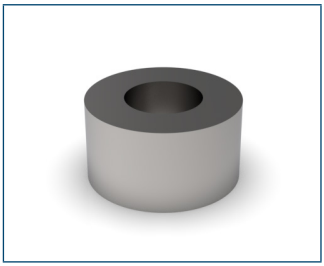

10 3D WEB

Respect the max. load
Maximale Nutzlast beachten
Rispettare il carico max.

Notes

Material: CK45

Screws not included

Unpainted

ORDER EXAMPLE

Art.	D=70	H=30	Screw
C12.28.	070	030	M12

OMCR CODE	D	D1	D2	H	H1	Screw
C12.28.040020M12	40	13	20	20	6	M12
C12.28.070030M08	70	9	15	30	16	M08
C12.28.070030M12	70	13	20	30	15	M12

SPACING BAR - ABSTELLBOLZEN - DISTANZIALE

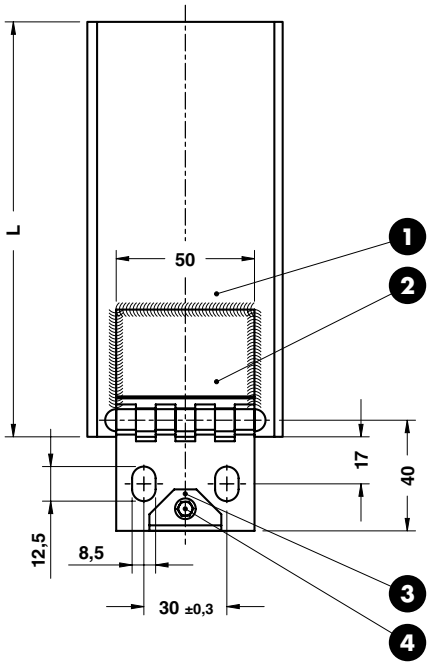

TYPE 02

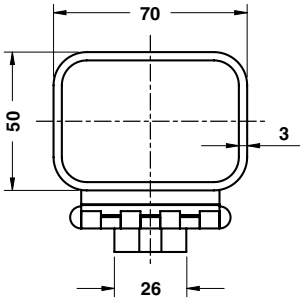

SPACING BAR - ABSTELLBOLZEN - DISTANZIALE

Respect the max. load
Maximale Nutzlast beachten
Rispettare il carico max.

Notes

1. **Material:** St37
2. AHA Hinge
3. **Material:** Elastomer 68SH
4. Screw M4x8 - DIN912

Application example

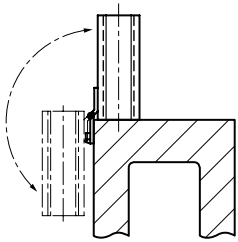

STOCK ... 3D WEB

ORDER EXAMPLE	Art.	TYPE	L=70
	C12.30.	02	070

OMCR CODE	TYPE	L	Max load (kN)
C12.30.02065	02	65	100
C12.30.02070	02	70	100
C12.30.02075	02	75	100
C12.30.02080	02	80	100
C12.30.02085	02	85	100
C12.30.02090	02	90	100
C12.30.02095	02	95	100
C12.30.02100	02	100	100
C12.30.02105	02	105	100
C12.30.02110	02	110	100
C12.30.02115	02	115	100
C12.30.02120	02	120	100
C12.30.02125	02	125	100
C12.30.02130	02	130	100
C12.30.02135	02	135	100
C12.30.02140	02	140	100

OMCR CODE	TYPE	L	Max load (kN)
C12.30.02150	02	150	100
C12.30.02155	02	155	100
C12.30.02160	02	160	100
C12.30.02165	02	165	100
C12.30.02170	02	170	100
C12.30.02175	02	175	100
C12.30.02180	02	180	100
C12.30.02185	02	185	100
C12.30.02190	02	190	100
C12.30.02195	02	195	100
C12.30.02200	02	200	100
C12.30.02205	02	205	100
C12.30.02210	02	210	100
C12.30.02215	02	215	100
C12.30.02220	02	220	100
C12.30.02225	02	225	100

OMCR CODE	TYPE	L	Max load (kN)
C12.30.02230	02	230	100
C12.30.02235	02	235	100
C12.30.02240	02	240	100
C12.30.02245	02	245	100
C12.30.02250	02	250	100
C12.30.02260	02	260	100
C12.30.02270	02	270	100
C12.30.02280	02	280	100
C12.30.02290	02	290	100
C12.30.02300	02	300	100
C12.30.02310	02	310	100
C12.30.02320	02	320	100
C12.30.02330	02	330	100
C12.30.02340	02	340	100
C12.30.02350	02	350	100

OMCR

SPACING BAR - ABSTELLBOLZEN - DISTANZIALE

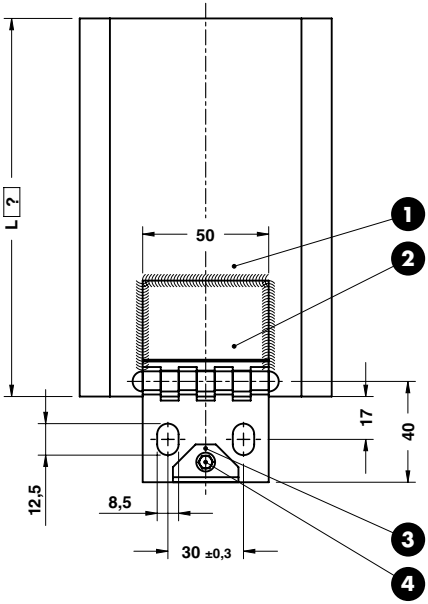

TYPE 01

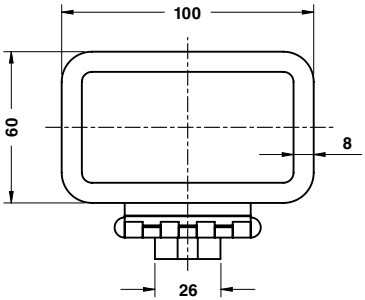

TYPE 02

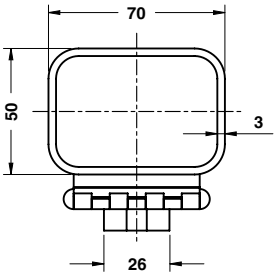

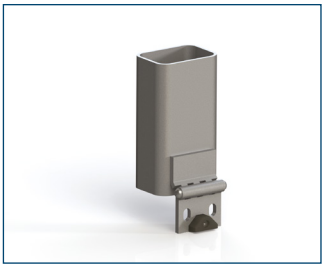

WEB

L max. = 400

Respect the max. load
Maximale Nutzlast beachten
Rispettare il carico max.

Notes

1. **Material:** St37
2. AHA Hinge
3. **Material:** Elastomer 68SH
4. Screw M4x8 - DIN912

Application example

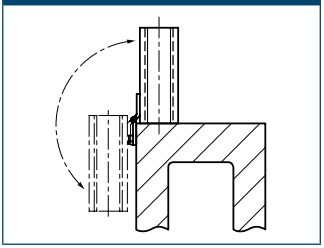

ORDER EXAMPLE	Art.	TYPE	L=200
	C12.30.	01	200

OMCR CODE	TYPE	Max load (kN)
C12.30.	01	300
C12.30.	02	100

SPACING BAR - ABSTELLBOLZEN - DISTANZIALE

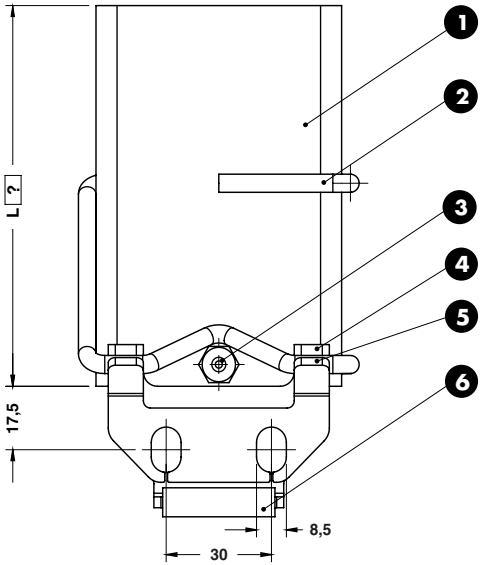

TYPE 03

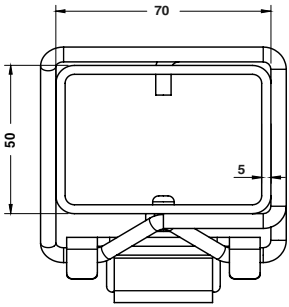

TYPE 04

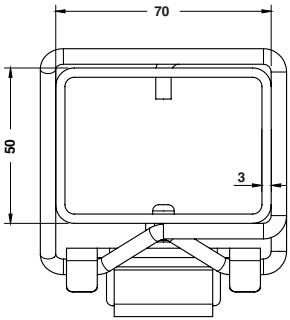

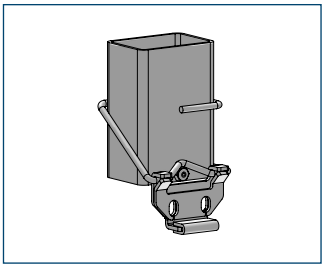

10 ... 3D WEB

80 ≤ L ≥ 400

Respect the max. load
Maximale Nutzlast beachten
Rispettare il carico max.

Notes

1. **Material:** St37
2. Steel spring
3. Rivet
4. Plate
5. Plate
6. PVC

Application example

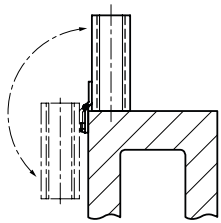

ORDER EXAMPLE	Art.	TYPE	L=200
	C12.30.	03	200

OMCR CODE	TYPE	Max load (kN)
C12.30.	03	235
C12.30.	04	125

OMCR

PAD RETAINER PIN VDI 3365 - STECKBOLZEN VDI 3365 - PERNO DI ARRESTO VDI 3365

Respect the dynamic load
Dynamische Last berücksichtigen
Rispettare il carico dinamico

Notes

1. **Material:** 42CrMo4
   800÷1000 N/mm²
2. **Material:** CK45
3. Screw M12x20 - DIN 912

Application example

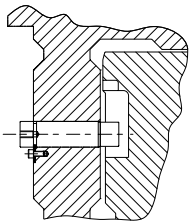

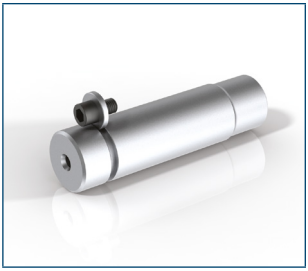

STOCK ... 3D WEB

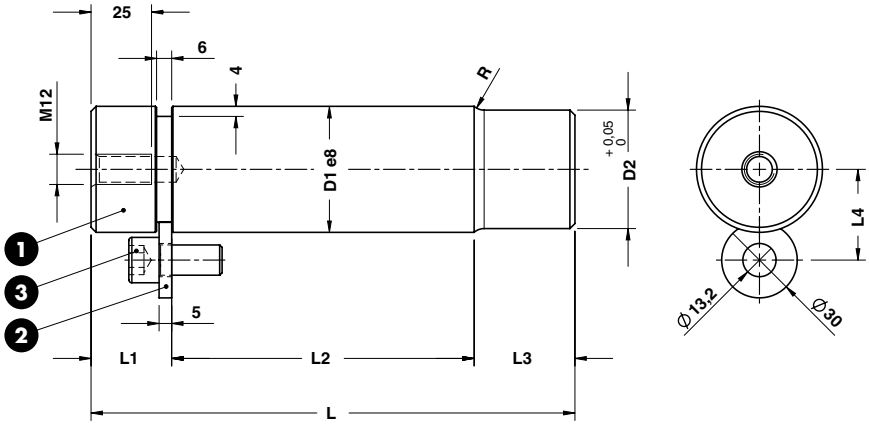

ORDER EXAMPLE	Art.	D1=32	L=105
	C13.10.	32	105

OMCR CODE	D1	D2	L	L1	L2	L3	L4	R	Dynamic load (kN)
C13.10.32105	32	29	105	22	58	25	27	4	3
C13.10.32122	32	29	122	22	75	25	27	4	3
C13.10.40139	40	37	139	32	75	32	31	5	5
C13.10.40159	40	37	159	32	95	32	31	5	5
C13.10.50167	50	47	167	32	95	40	36	6	7,5
C13.10.50192	50	47	192	32	120	40	36	6	7,5
C13.10.63202	63	60	202	32	120	50	42,5	6	12,5
C13.10.63237	63	60	237	32	155	50	42,5	6	12,5

PAD RETAINER PIN VDI 3365 - STECKBOLZEN VDI 3365 - PERNO DI ARRESTO VDI 3365

Respect the dynamic load
Dynamische Last berücksichtigen
Rispettare il carico dinamico

Notes

1. **Material:** 42CrMo4 800÷1000 N/mm²
2. **Material:** CK45
3. Screw M12x20 - DIN 912

Application example

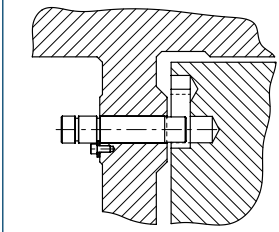

STOCK ... 3D WEB

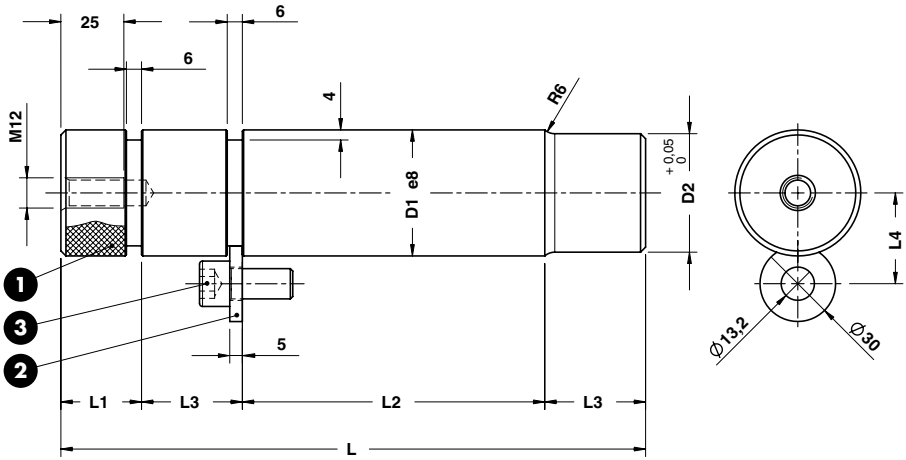

ORDER EXAMPLE	Art.	D1=32	L=130
	C13.11.	32	130

OMCR CODE	D1	D2	L	L1	L2	L3	L4	R	Dynamic load (kN)
C13.11.32130	32	29	130	22	58	25	27	4	3
C13.11.32147	32	29	147	22	75	25	27	4	3
C13.11.40171	40	37	171	32	75	32	31	5	5
C13.11.40191	40	37	191	32	95	32	31	5	5
C13.11.50207	50	47	207	32	95	40	36	6	7,5
C13.11.50232	50	47	232	32	120	40	36	6	7,5
C13.11.63252	63	60	252	32	120	50	42,5	6	12,5
C13.11.63287	63	60	287	32	155	50	42,5	6	12,5

OMCR

RETAINER BOLT - ZUGBOLZENSATZ - GRUPPO TIRANTE

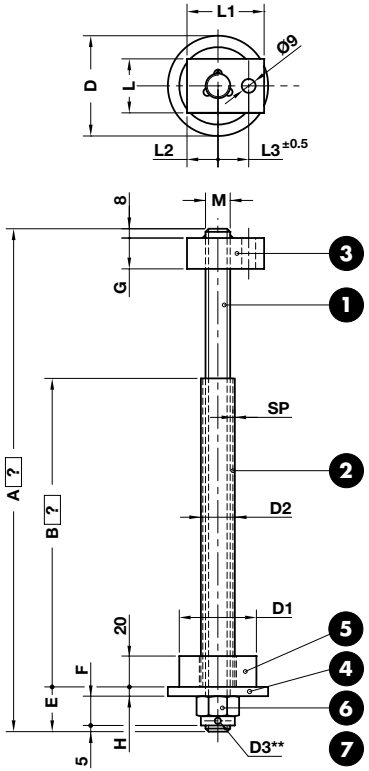

**Drill hole in rod for copper pin at assembly
Bohrung für splint durchzufuhren bei der montage
Foro per copiglia da eseguire al montaggio

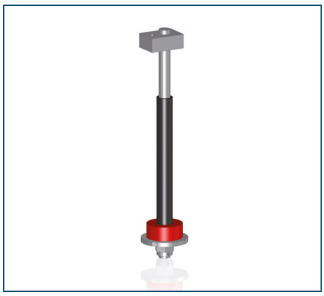

WEB

Respect the max. load
Maximale Nutzlast beachten
Rispettare il carico max.

Notes

1. **Material:** Thread rod cl 8.8
2. 3 **Material:** St37
4. **Material:** CK45
5. Elastomer 92SH
6. DIN 935 cl. 8.8
7. DIN 94

Application example

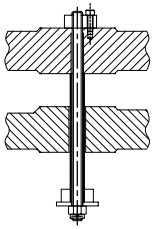

ORDER EXAMPLE

Art.	M=M30	A=100	B=60
C13.20.	M30	100	60

OMCR CODE	D	D1	D2	D3	SP	E	F	G	H	L	L1	L2	L3	M	Max load (kN)
C13.20.	65	50	22	4	2,5	30	19	20	6	35	50	20	20	M16	2,5
C13.20.	82	63	25	4	2	35	22	20	8	40	50	20	20	M20	4,5
C13.20.	105	80	30	5	2,5	42	27	20	10	45	50	20	20	M24	7,5
C13.20.	130	100	38	6,3	3,5	50	33	25	12	50	63	28	26	M30	12,5

OMCR

GROUND COLLAR SCREW - SCHRAUBE MIT DISTANZROHR - VITE CON COLLETTO

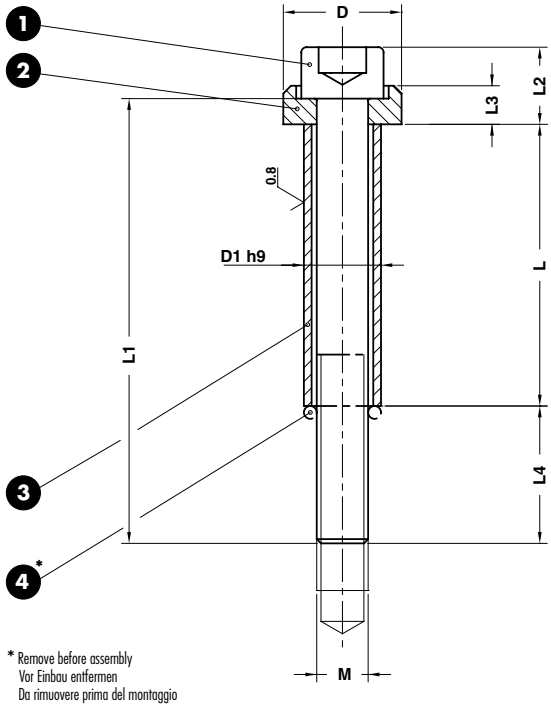

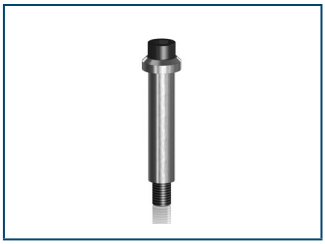

STOCK ... 3D WEB

Notes

1. DIN 912 cl. 12.9
2. **Material:** Steel 1000 N/mm²
3. **Material:** Steel 1200÷1400 N/mm²
4. O-Ring*

Application example

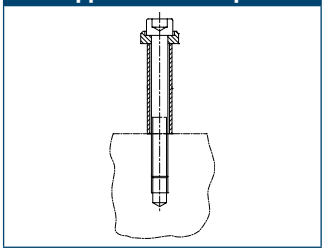

ORDER EXAMPLE

Art.	M=M6	L=70
C13.24.	M06	070

OMCR CODE	D	D1	L	L1	L2	L3	L4	M
C13.24.M06020	15	10	20	35	10	5,5	11	M6
C13.24.M06025	15	10	25	40	10	5,5	11	M6
C13.24.M06030	15	10	30	45	10	5,5	11	M6
C13.24.M06035	15	10	35	50	10	5,5	11	M6
C13.24.M06040	15	10	40	55	10	5,5	11	M6
C13.24.M06045	15	10	45	60	10	5,5	11	M6
C13.24.M06050	15	10	50	65	10	5,5	11	M6
C13.24.M06055	15	10	55	70	10	5,5	11	M6
C13.24.M06060	15	10	60	80	10	5,5	16	M6
C13.24.M06070	15	10	70	90	10	5,5	16	M6
C13.24.M06080	15	10	80	100	10	5,5	16	M6
C13.24.M06090	15	10	90	110	10	5,5	16	M6
C13.24.M06100	15	10	100	120	10	5,5	16	M6
C13.24.M08030	19	12,5	30	45	13	6,5	10	M8
C13.24.M08035	19	12,5	35	50	13	6,5	10	M8
C13.24.M08040	19	12,5	40	55	13	6,5	10	M8
C13.24.M08045	19	12,5	45	60	13	6,5	10	M8

GROUND COLLAR SCREW - SCHRAUBE MIT DISTANZROHR - VITE CON COLLETTO

OMCR CODE	D	D1	L	L1	L2	L3	L4	M
C13.24.M08050	19	12,5	50	65	13	6,5	10	M8
C13.24.M08055	19	12,5	55	70	13	6,5	10	M8
C13.24.M08060	19	12,5	60	80	13	6,5	15	M8
C13.24.M08070	19	12,5	70	90	13	6,5	15	M8
C13.24.M08080	19	12,5	80	100	13	6,5	15	M8
C13.24.M08090	19	12,5	90	110	13	6,5	15	M8
C13.24.M08100	19	12,5	100	120	13	6,5	15	M8
C13.24.M10030	23	15	30	50	15	7,5	15	M10
C13.24.M10035	23	15	35	55	15	7,5	15	M10
C13.24.M10040	23	15	40	60	15	7,5	15	M10
C13.24.M10045	23	15	45	65	15	7,5	15	M10
C13.24.M10050	23	15	50	70	15	7,5	15	M10
C13.24.M10055	23	15	55	75	15	7,5	15	M10
C13.24.M10060	23	15	60	80	15	7,5	15	M10
C13.24.M10070	23	15	70	90	15	7,5	15	M10
C13.24.M10080	23	15	80	100	15	7,5	15	M10
C13.24.M10090	23	15	90	110	15	7,5	15	M10
C13.24.M10100	23	15	100	120	15	7,5	15	M10
C13.24.M10120	23	15	120	140	15	7,5	15	M10
C13.24.M12030	27	17,5	30	50	18	9	14	M12
C13.24.M12040	27	17,5	40	60	18	9	14	M12
C13.24.M12045	27	17,5	45	65	18	9	14	M12
C13.24.M12050	27	17,5	50	70	18	9	14	M12
C13.24.M12055	27	17,5	55	80	18	9	19	M12
C13.24.M12060	27	17,5	60	90	18	9	24	M12
C13.24.M12070	27	17,5	70	100	18	9	24	M12
C13.24.M12080	27	17,5	80	110	18	9	24	M12
C13.24.M12090	27	17,5	90	120	18	9	24	M12
C13.24.M12100	27	17,5	100	130	18	9	24	M12
C13.24.M12110	27	17,5	110	140	18	9	24	M12
C13.24.M12120	27	17,5	120	150	18	9	24	M12
C13.24.M12140	27	17,5	140	180	18	9	24	M12
C13.24.M16050	34	23	50	80	24	11	22	M16
C13.24.M16060	34	23	60	90	24	11	22	M16
C13.24.M16070	34	23	70	100	24	11	22	M16
C13.24.M16080	34	23	80	110	24	11	22	M16
C13.24.M16090	34	23	90	120	24	11	22	M16
C13.24.M16100	34	23	100	130	24	11	22	M16
C13.24.M16110	34	23	110	140	24	11	22	M16
C13.24.M16120	34	23	120	150	24	11	22	M16
C13.24.M16140	34	23	140	180	24	11	32	M16
C13.24.M16150	34	23	150	180	24	11	22	M16
C13.24.M16160	34	23	160	200	24	11	32	M16

C13.25.?

OMCR

PAD RETAINER - HALTEELEMENT - GRUPPO TIRANTE

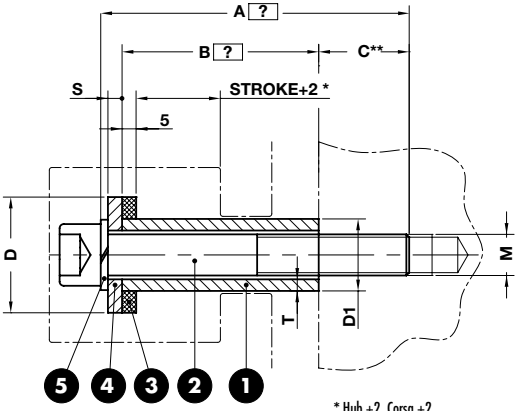

10

...

3D

WEB

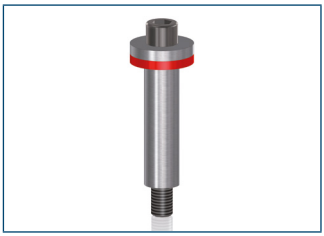

Respect the max. load
Maximale Nutzlast beachten
Rispettare il carico max.

ORDER EXAMPLE	Art.	M=M10	A=100	B=76
	C13.25.	M10	A100	B076

* Hub +2, Corsa +2
**1,5 x d on steel, auf stahl, su acciaio
2 x d on cast iron, auf gusseisen, su ghisa

OMCR CODE	D	D1	M	S	T	Max load (kN)
C13.25.	32	16	M10	4	2,5	1
C13.25.	36	20	M12	6	3,5	1,5
C13.25.	45	28	M16	6	5,5	2,5

Notes

1. **Material:** St37
2. DIN 912 cl. 8.8
3. **Material:** Elastomer 92SH
4. **Material:** CK45
5. SCHNORR

C13.26.?

OMCR

PAD RETAINER - HALTEELEMENT - GRUPPO TIRANTE

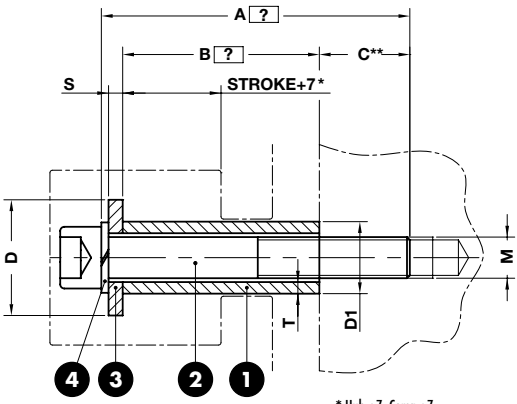

10

...

3D

WEB

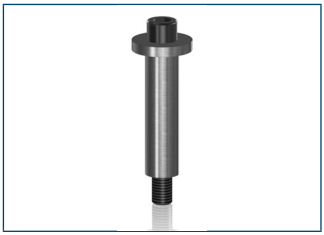

Respect the max. load
Maximale Nutzlast beachten
Rispettare il carico max.

ORDER EXAMPLE	Art.	M=M10	A=100	B=76
	C13.26.	M10	A100	B076

* Hub +7, Corsa +7
** 1,5 x d on steel, auf stahl, su acciaio
2 x d on cast iron, auf gusseisen, su ghisa

OMCR CODE	D	D1	M	S	T	Max load (kN)
C13.26.	25	16	M10	4	2,5	1
C13.26.	30	20	M12	6	3,5	1,5
C13.26.	40	28	M16	6	5,5	2,5

Notes

1. **Material:** St37
2. DIN 912 cl. 8.8
3. **Material:** CK45
4. SCHNORR

OMCR

ANTI-REBOUND PAD RETAINER
HALTEELEMENT MIT DÄMPFUNG
GRUPPO TIRANTE ANTIRIMBALZO

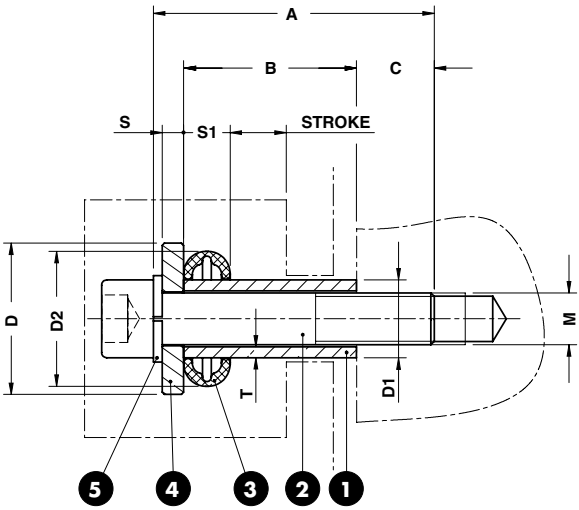

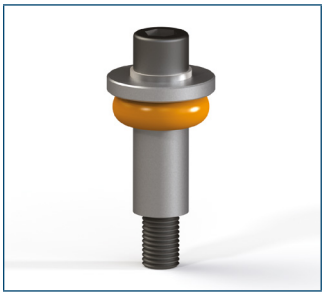

STOCK ... 3D WEB

Respect the max. load
Maximale Nutzlast beachten
Rispettare il carico max.

Notes

1. **Material:** St37
2. DIN 912 cl. 8.8
3. C17.27
4. **Material:** CK45
5. DIN 127

For dimensioning see pages 90-91
Dimensionierung s. Seiten 90-91
Per il dimensionamento vedi pagine 90-91

ORDER EXAMPLE

Art.	M=M10	A=75	B=50
C13.27.	M10	075	050

OMCR CODE	A	B	C	D	D1	D2	M	S	S1	T
C13.27.M10065040	65	40	18	30	16	26,4	M10	5	7,8	2,5
C13.27.M10075050	75	50	18	30	16	26,4	M10	5	7,8	2,5
C13.27.M10090063	90	63	20	30	16	26,4	M10	5	7,8	2,5
C13.27.M10130100	130	100	18	30	16	26,4	M10	5	7,8	2,5
C13.27.M12080050	80	50	23	35	20	32,1	M12	5	10,8	3,5
C13.27.M12090063	90	63	20	35	20	32,1	M12	5	10,8	3,5
C13.27.M12110080	110	80	23	35	20	32,1	M12	5	10,8	3,5
C13.27.M12130100	130	100	23	35	20	32,1	M12	5	10,8	3,5
C13.27.M16100063	100	63	28	50	25	45,8	M16	6	17,0	4
C13.27.M16120080	120	80	31	50	25	45,8	M16	6	17,0	4
C13.27.M16140100	140	100	31	50	25	45,8	M16	6	17,0	4
C13.27.M16160125	160	125	26	50	25	45,8	M16	6	17,0	4
C13.27.M20130080	130	80	38	65	30	54,6	M20	8	21,3	4
C13.27.M20170125	170	125	33	65	30	54,6	M20	8	21,3	4
C13.27.M24140080	140	80	45	70	36	61,8	M24	10	21,5	5
C13.27.M24160100	160	100	45	70	36	61,8	M24	10	21,5	5
C13.27.M24180125	180	125	40	70	36	61,8	M24	10	21,5	5
C13.27.M30160080	160	80	59	90	42	78,5	M30	15	29,4	5
C13.27.M30180100	180	100	59	90	42	78,5	M30	15	29,4	5
C13.27.M30200125	200	125	54	90	42	78,5	M30	15	29,4	5

ANTI-REBOUND PAD RETAINER
HALTEELEMENT MIT DÄMPFUNG
GRUPPO TIRANTE ANTIRIMBALZO

EXAMPLE:

Pressure pad weight - Niederhaltergewicht - Massa del premilamiera: **500 daN**
Pressure pad speed - Niederhaltergeschwindigkeit - Velocità del premilamiera: **0,4 m/s**
Strokes/minute - Hübe/min - Corse/min.: **20**

Strokes/minute 18÷25

Pressure pad weight (daN)	Pressure pad speed (m/s)										
	0,1	0,2	0,3	0,4	0,5	0,6	0,7	0,8	0,9	1	1,1
100	2x M10	2x M10	2x M10	2x M12	2x M12	3x M12	3x M12	2x M16	3x M16	3x M16	2x M20
				4x M10	5x M10	7x M10	9x M10	4x M12	5x M12	6x M12	4x M16
250	2x M10	3x M10	2x M12	3x M12	3x M16	3x M16	2x M20	2x M20	3x M20	3x M20	3x M24
			5x M10	8x M10	4x M12	6x M12	4x M16	5x M16	6x M16	8x M16	4x M20
500	3x M10	3x M12	3x M16	3x M16	3x M20	3x M20	3x M24	3x M24	3x M30	3x M30	4x M30
		6x M10	4x M12	6x M12	5x M16	6x M16	4x M20	4x M20	4x M24	4x M24	5x M24
750	3x M12	3x M16	3x M16	3x M20	3x M20	3x M24	3x M24	3x M30	4x M30	4x M30	5x M30
	5x M10	4x M12	6x M12	5x M16	7x M16	4x M20	5x M20	4x M24	5x M24	6x M24	7x M24
1000	3x M12	3x M16	3x M20	3x M20	3x M24	3x M30	3x M30	4x M30	5x M30	6x M30	7x M30
	6x M10	5x M12	4x M16	6x M16	4x M20	4x M24	4x M24	5x M24	7x M24	8x M24	9x M24

- **Nr.3 C13.27.M16 or nr.6 C13.27.M12**
- **3 St. C13.27.M16 oder 6 St. C13.27.M12**
- **N.3 C13.27.M16 o n.6 C13.27.M12**

Strokes/minute ≤17

Pressure pad weight (daN)	Pressure pad speed (m/s)												
	0,1	0,2	0,3	0,4	0,5	0,6	0,7	0,8	0,9	1	1,1	1,2	1,3
100	2x M10	2x M10	2x M10	2x M12	2x M12	3x M12	3x M12	2x M16	3x M16	3x M16	2x M20	2x M20	2x M20
				4x M10	5x M10	7x M10	9x M10	4x M12	5x M12	6x M12	4x M16	4x M16	5x M16
250	2x M10	3x M10	2x M12	3x M12	2x M16	3x M16	2x M20	2x M20	3x M20	3x M20	3x M24	3x M24	3x M24
			5x M10	8x M10	4x M12	6x M12	4x M16	5x M16	6x M16	7x M16	4x M20	5x M20	5x M20
500	3x M10	3x M12	3x M16	3x M16	3x M20	3x M20	3x M24	3x M24	3x M30	3x M30	3x M30	3x M30	4x M30
		6x M10	4x M12	6x M12	4x M16	6x M16	4x M20	4x M20	4x M24	4x M24	5x M24	6x M24	6x M24
750	3x M12	3x M16	3x M16	3x M20	3x M20	3x M24	3x M24	3x M30	3x M30	3x M30	4x M30	5x M30	5x M30
	5x M10	4x M12	6x M12	5x M16	6x M16	4x M20	5x M20	4x M24	5x M24	6x M24	7x M24	8x M24	9x M24
1000	3x M12	3x M16	3x M20	3x M20	3x M24	3x M30	3x M30	3x M30	4x M30	4x M30	5x M30	6x M30	7x M30
	6x M10	5x M12	4x M16	6x M16	4x M20	4x M24	4x M24	5x M24	7x M24	8x M24	9x M24	11x M24	12x M24
1250	4x M12	4x M16	4x M20	4x M20	4x M24	4x M24	4x M30	4x M30	5x M30	5x M30	6x M30	7x M30	9x M30
	7x M10	6x M12	5x M16	7x M16	5x M20	7x M20	5x M24	7x M24	8x M24	10x M24	11x M24		
1500	4x M12	4x M16	4x M20	4x M20	4x M24	4x M30	4x M30	5x M30	5x M30	6x M30	8x M30	9x M30	10x M30
	9x M10	7x M12	6x M16	9x M16	6x M20	5x M24	6x M24	8x M24	10x M24	11x M24			
1750	4x M16	4x M16	4x M20	4x M24	4x M30	4x M30	4x M30	5x M30	6x M30	7x M30	9x M30	10x M30	12x M30
	5x M12	8x M12	7x M16	5x M20	5x M24	6x M24	7x M24	9x M24	11x M24				
2000	4x M16	4x M20	4x M20	4x M24	4x M30	4x M30	5x M30	6x M30	7x M30	8x M30	10x M30	12x M30	
	6x M12	5x M16	8x M16	6x M20	5x M24	7x M24	8x M24	10x M24					
2500	4x M16	4x M20	4x M24	4x M30	4x M30	5x M30	6x M30	7x M30	9x M30	10x M30	12x M30		
	7x M12	6x M16	5x M20	5x M24	6x M24	8x M24	10x M24						
3000	4x M16	4x M20	4x M24	4x M30	5x M30	6x M30	7x M30	9x M30	10x M30	12x M30			
	8x M12	7x M16	6x M20	6x M24	7x M24	10x M24	12x M24						
3500	4x M20	4x M24	4x M30	4x M30	5x M30	7x M30	8x M30	10x M30	12x M30				
	5x M16	5x M20	5x M24	6x M24	9x M24	11x M24							
4000	4x M20	4x M24	4x M30	5x M30	6x M30	7x M30	9x M30	11x M30					
	6x M16	6x M20	5x M24	7x M24	10x M24								
4500	4x M20	4x M24	4x M30	5x M30	7x M30	8x M30	10x M30						
	6x M16	6x M20	6x M24	8x M24	11x M24								
5000	4x M24	4x M30	4x M30	6x M30	7x M30	9x M30	12x M30						
	5x M20	5x M24	6x M24	9x M24	12x M24								
5500	4x M24	4x M30	5x M30	6x M30	8x M30	10x M30							
	5x M20	5x M24	7x M24	10x M24									
6000	4x M24	4x M30	5x M30	7x M30	9x M30	11x M30							
	5x M20	5x M24	8x M24	11x M24									

Strokes/minute 18÷25

Pressure pad weight (daN)	Pressure pad speed (m/s)												
	0,1	0,2	0,3	0,4	0,5	0,6	0,7	0,8	0,9	1	1,1	1,2	1,3
100	2x M10	2x M10	2x M10	2x M12 4x M10	2x M12 5x M10	3x M12 7x M10	3x M12 9x M10	2x M16 4x M12	3x M16 5x M12	3x M16 6x M12	2x M20 4x M16	2x M20 5x M16	2x M20 5x M16
250	2x M10	3x M10	2x M12 5x M10	3x M12 8x M10	3x M16 4x M12	3x M16 6x M12	2x M20 4x M16	2x M20 5x M16	3x M20 6x M16	3x M20 8x M16	3x M24 4x M20	3x M24 5x M20	3x M24 5x M20
500	3x M10	3x M12 6x M10	3x M16 4x M12	3x M16 6x M12	3x M20 5x M16	3x M20 6x M16	3x M24 4x M20	3x M24 4x M20	3x M30 4x M24	3x M30 4x M24	4x M30 5x M24	4x M30 6x M24	5x M30 6x M24
750	3x M12 5x M10	3x M16 4x M12	3x M16 6x M12	3x M20 5x M16	3x M20 7x M16	3x M24 4x M20	3x M24 5x M20	3x M30 4x M24	4x M30 5x M24	4x M30 6x M24	5x M30 7x M24	6x M30 8x M24	7x M30 9x M24
1000	3x M12 6x M10	3x M16 5x M12	3x M20 4x M16	3x M20 6x M16	3x M24 4x M20	3x M30 4x M24	3x M30 4x M24	4x M30 5x M24	5x M30 7x M24	6x M30 8x M24	7x M30 9x M24	8x M30 11x M24	9x M30 12x M24
1250	4x M12 7x M10	4x M16 6x M12	4x M20 5x M16	4x M20 8x M16	4x M24 5x M20	4x M24 7x M20	4x M30 5x M24	5x M30 7x M24	6x M30 8x M24	7x M30 10x M24	8x M30 11x M24	10x M30	11x M30
1500	4x M12 9x M10	4x M16 7x M12	4x M20 6x M16	4x M24 5x M20	4x M24 6x M20	4x M30 5x M24	5x M30 6x M24	6x M30 8x M24	7x M30 10x M24	8x M30 11x M24	10x M30	12x M30	
1750	4x M16 5x M12	4x M16 8x M12	4x M20 7x M16	4x M24 5x M20	4x M30 5x M24	4x M30 6x M24	6x M30 7x M24	7x M30 9x M24	8x M30 11x M24	10x M30	12x M30		
2000	4x M16 6x M12	4x M20 5x M16	4x M20 8x M16	4x M24 6x M20	4x M30 5x M24	5x M30 7x M24	6x M30 8x M24	8x M30 10x M24	9x M30	11x M30			
2500	4x M16 7x M12	4x M20 6x M16	4x M24 5x M20	4x M30 5x M24	5x M30 6x M24	6x M30 8x M24	8x M30 10x M24	10x M30	12x M30				
3000	4x M16 8x M12	4x M20 7x M16	4x M24 6x M20	4x M30 6x M24	6x M30 7x M24	7x M30 10x M24	9x M30 12x M24	11x M30					
3500	4x M20 5x M16	4x M24 5x M20	4x M30 5x M24	5x M30 6x M24	7x M30 9x M24	8x M30 11x M24	11x M30						
4000	4x M20 6x M16	4x M24 6x M20	4x M30 5x M24	6x M30 7x M24	7x M30 10x M24	10x M30	12x M30						
4500	4x M20 6x M16	4x M24 6x M20	5x M30 6x M24	6x M30 8x M24	8x M30 11x M24	11x M30							
5000	4x M24 5x M20	4x M30 5x M24	5x M30 6x M24	7x M30 9x M24	9x M30 12x M24	12x M30							
5500	4x M24 5x M20	4x M30 5x M24	6x M30 7x M24	8x M30 10x M24	10x M30								
6000	4x M24 6x M20	4x M30 5x M24	6x M30 8x M24	8x M30 11x M24	11x M30								

Strokes/minute 26÷40

Pressure pad weight (daN)	Pressure pad speed (m/s)												
	0,1	0,2	0,3	0,4	0,5	0,6	0,7	0,8	0,9	1	1,1	1,2	1,3
100	2x M10	2x M10	2x M10	2x M12 4x M10	2x M12 5x M10	3x M12 7x M10	3x M12 9x M10	2x M16 4x M12	3x M16 5x M12	3x M16 6x M12	3x M20 4x M16	3x M20 5x M16	2x M24 4x M20
250	2x M10	3x M10	2x M12 5x M10	3x M12 8x M10	3x M16 4x M12	3x M16 6x M12	3x M20 4x M16	2x M24 4x M20	3x M24 4x M20	3x M24 5x M20	3x M30 4x M24	4x M30 5x M24	4x M30 5x M24
400	3x M10	2x M12 5x M10	3x M12 8x M10	3x M16 5x M12	3x M20 4x M16	2x M24 4x M20	3x M24 5x M20	3x M30 4x M24	3x M30 4x M24	4x M30 5x M24	5x M30 6x M24	5x M30 7x M24	6x M30 8x M24
550	3x M10	3x M12 6x M10	3x M16 4x M12	3x M20 4x M16	3x M24 4x M20	3x M324 5x M20	3x M30 4x M24	4x M30 5x M24	4x M30 6x M24	5x M30 7x M24	6x M30 8x M24	7x M30 9x M24	8x M30 11x M24
700	3x M12 4x M10	3x M16 4x M12	3x M16 5x M12	3x M20 4x M16	3x M24 5x M20	3x M30 4x M24	4x M30 5x M24	5x M30 6x M24	6x M30 7x M24	7x M30 8x M24	8x M30 10x M24	9x M30 12x M24	10x M30
850	3x M12 5x M10	3x M16 4x M12	3x M20 4x M16	3x M24 4x M20	3x M24 5x M20	4x M30 4x M24	4x M30 6x M24	5x M30 7x M24	7x M30 8x M24	8x M30 10x M24	9x M30 12x M24	11x M30	12x M30
1000	3x M12 6x M10	3x M16 5x M12	3x M20 4x M16	3x M24 5x M20	3x M30 4x M24	4x M30 5x M24	5x M30 7x M24	6x M30 8x M24	8x M30 10x M24	9x M30 12x M24	11x M30		
1150	3x M16 4x M12	3x M16 6x M12	3x M24 4x M20	3x M24 5x M20	4x M30 4x M24	5x M30 6x M24	6x M30 7x M24	7x M30 9x M24	9x M30 11x M24	10x M30	12x M30		
1300	4x M12 7x M10	4x M16 6x M12	4x M20 5x M16	4x M24 6xM20	4x M30 5x M24	5x M30 7x M24	6x M30 8x M24	8x M30 10x M24	10x M30	12x M30			
1450	4x M12 8x M10	4x M16 7x M12	4x M24 5x M20	4x M24 7x M20	4x M30 6x M24	6x M30 7x M24	7x M30 9x M24	9x M30 12x M24	11x M30				
1600	4x M16 5x M12	4x M16 8x M12	4x M24 5x M20	4x M24 7x M20	5x M30 6x M24	6x M30 8x M24	8x M30 10x M24	10x M30	12x M30				
1850	4x M16 5x M12	4x M20 5x M16	4x M24 6x M20	4x M30 5x M24	5x M30 7x M24	7x M30 9x M24	9x M30 12x M24	11x M30					
2000	4x M16 6x M12	4x M20 5x M16	4x M24 6x M20	4x M30 5x M24	6x M30 7x M24	8x M30 10x M24	10x M30	12x M30					
2150	4x M16 6x M12	4x M20 5x M16	4x M24 7x M20	5x M30 6x M24	6x M30 8x M24	8x M30 10x M24	10x M30						
2300	4x M16 7x M12	4x M24 5x M20	4x M24 7x M20	5x M30 6x M24	7x M30 8x M24	9x M30 11x M24	11x M30						
2450	4x M16 7x M12	4x M24 5x M20	4x M30 5x M24	5x M30 7x M24	7x M30 9x M24	9x M30 12x M24	12x M30						
2600	4x M16 7x M12	4x M24 5x M20	4x M30 5x M24	6x M30 7x M24	8x M30 9x M24	10x M30	12x M30						

OMCR

COLLAR SCREW - SCHULTER-PASSCHRAUBE - VITE CON COLLETTO

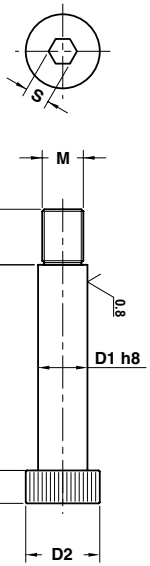

STOCK

3D WEB

Notes

Material: Steel cl. 12.9

ORDER EXAMPLE	Art.	D1=6	L=10
	C13.30.	06	010

M	M5	M6	M8	M10	M12	M16	M20
D1	6	8	10	12	16	20	24
D2	10	13	16	18	24	30	36
L1	9,5	11	13	16	18	22	27
L2	4,5	5,5	7	9	11	14	16
S	3	4	5	6	8	10	12
L							
10	•	•					
12	•	•					
15	•	•	•	•			
16	•	•	•	•			
20	•	•	•	•			
25	•	•	•	•			
30	•	•	•	•	•		
35	•	•	•	•	•		
40	•	•	•	•	•	•	
45	•	•	•	•	•	•	
50	•	•	•	•	•	•	•
55	•	•	•	•	•	•	•
60	•	•	•	•	•	•	•
65		•	•	•	•	•	•
70		•	•	•	•	•	•
80		•	•	•	•	•	•
90		•	•	•	•	•	•
100		•	•	•	•	•	•
120				•	•	•	•

OMCR

KEY - PASSFEDER - CHIAVETTA DI REAZIONE

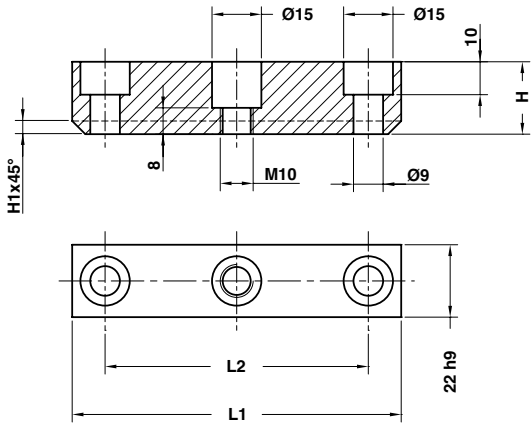

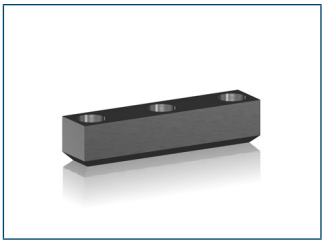

STOCK

3D WEB

Notes

Material: CK45

ORDER EXAMPLE

Art.	H=14	L1=50
C14.09.	14	050

OMCR CODE	H	H1	L1	L2
C14.09.14050	14	-	50	32
C14.09.14080	14	-	80	50
C14.09.14100	14	-	100	80
C14.09.14125	14	-	125	100
C14.09.22050	22	4	50	32
C14.09.22080	22	4	80	50
C14.09.22100	22	4	100	80
C14.09.22125	22	4	125	100
C14.09.40050	40	4	50	32
C14.09.40080	40	4	80	50
C14.09.40100	40	4	100	80
C14.09.40125	40	4	125	100

C14.10

OMCR

KEY - PASSFEDER - CHIAVETTA DI REAZIONE

STOCK

3D WEB

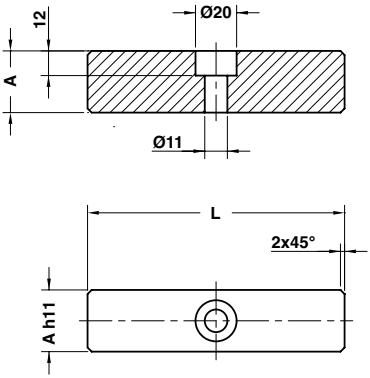

Notes

Material: CK45

ORDER EXAMPLE	Art.	A=25	L=80
	C14.10.	25	080

OMCR CODE	A	L
C14.10.25080	25	80
C14.10.25125	25	125
C14.10.30080	30	80
C14.10.30125	30	125

C14.11

OMCR

RETAINER - HALTESTÜCK - RITEGNO PER MATRICE

STOCK

3D WEB

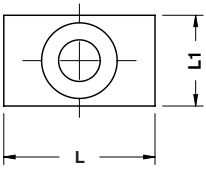

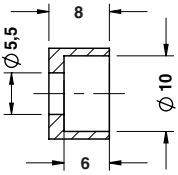

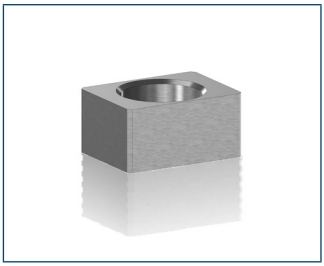

Notes

Material: CK45

ORDER EXAMPLE	Art.	L1=12	L=20
	C14.11.	12	20

OMCR CODE	L1	L
C14.11.1220	12	20
C14.11.1620	16	20

KEY - PASSFEDER - CHIAVETTA DI REAZIONE

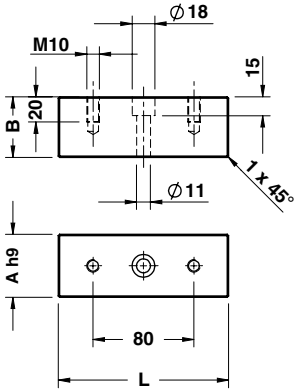

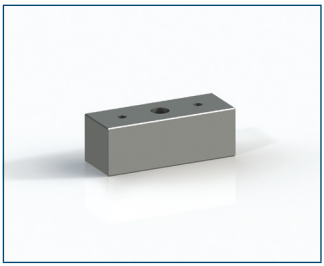

STOCK

3D WEB

Notes

Material: CK45

ORDER EXAMPLE

Art.	A=50	L=135
C14.20.	50	135

OMCR CODE	A	B	L
C14.20.42125	42	40	125
C14.20.50135	50	48	135
C14.20.50220	50	48	220

OMCR

KEY - PASSFEDER - CHIAVETTA DI REAZIONE

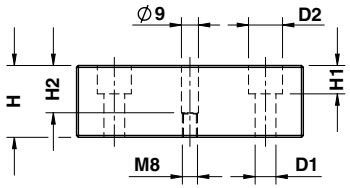

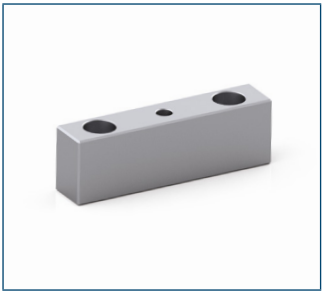

STOCK

3D WEB

TYPE 01

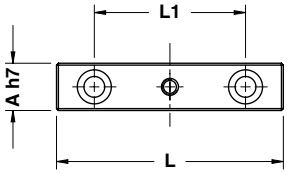

TYPE 02

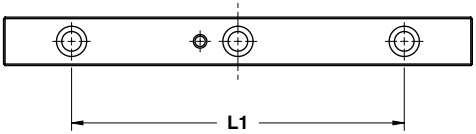

Notes

Material: CK45

ORDER EXAMPLE

Art.	A=25	H=38	L=120
C14.25.	25	38	120

OMCR CODE	A	D1	D2	H	H1	H2	L	L1	TYPE
C14.25.2538090	25	11	18	38	15	25	90	50	01
C14.25.2538120	25	11	18	38	15	25	120	80	01
C14.25.3248150	32	13	20	48	25	35	150	90	01
C14.25.3248210	32	13	20	48	25	35	210	130	01
C14.25.3258260	32	13	20	58	25	42	260	150	01
C14.25.3258310	32	13	20	58	25	42	310	220	02
C14.25.3258350	32	13	20	58	25	42	350	250	02

KEY - PASSFEDER - CHIAVETTA

TYPE 01

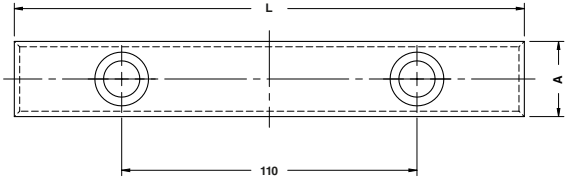

STOCK 3D WEB

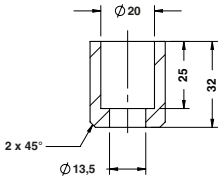

Notes

Material: CK45

TYPE 10

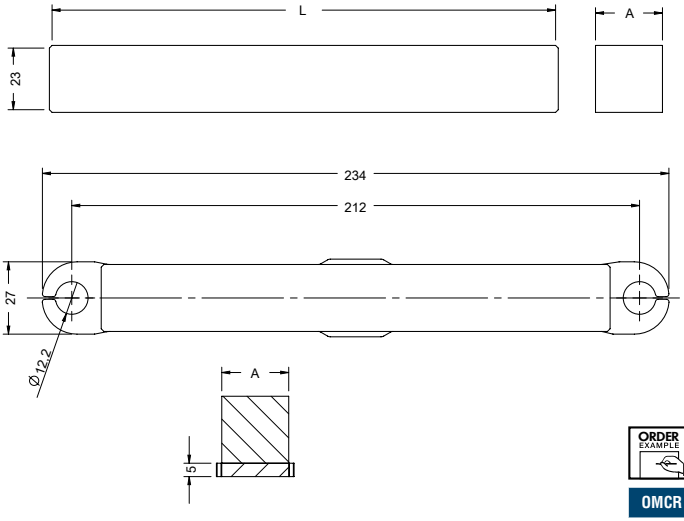

ORDER EXAMPLE	Art.	TYPE
	C14.28.	10

OMCR CODE	L	A	TYPE
C14.28.01	190	28	01
C14.28.10	188	25	10

OMCR

LOCATING BLOCK - FANGBACKE - TASSELLO DI CENTRAGGIO

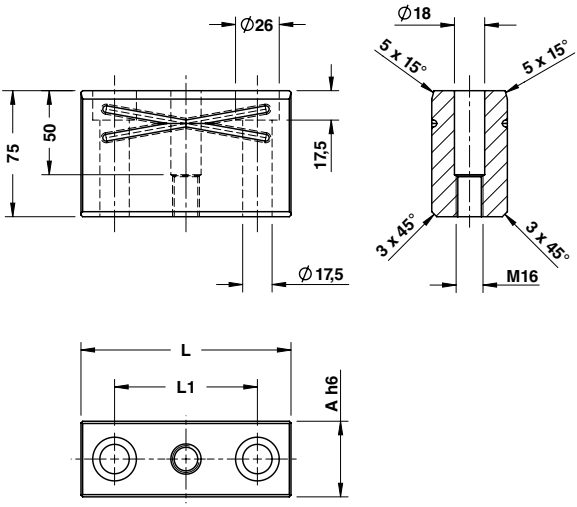

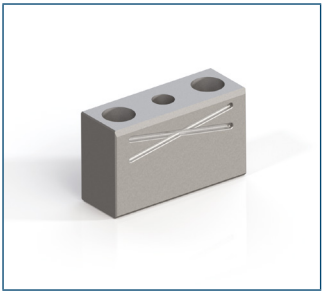

STOCK

3D WEB

Notes

Material: 16MnCr5 - **HRC:** 60÷62

ORDER EXAMPLE	Art.	A=45	L=125
	C14.30.	45	125

OMCR CODE	A	L	L1
C14.30.45100	45	100	60
C14.30.45125	45	125	85
C14.30.45160	45	160	120
C14.30.45200	45	200	160

C15.10

OMCR

CLAMP - BEFESTIGUNGSELEMENT - MORSETTO

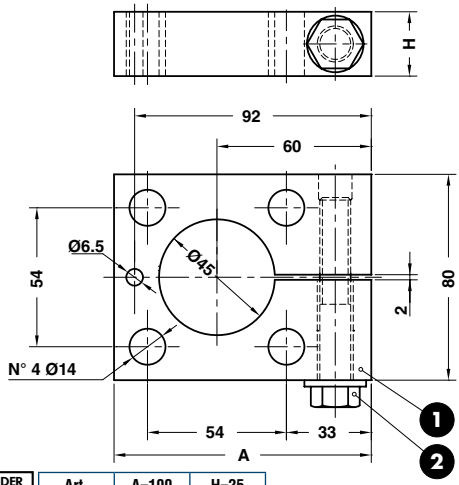

STOCK

WEB

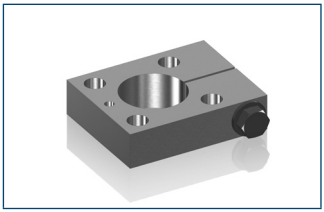

Notes

1. **Material:** CK45
2. M12 x 70 DIN 931

Application example

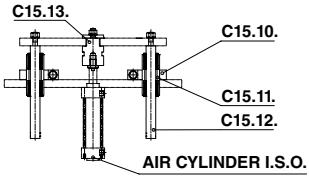

ORDER EXAMPLE

Art.	A=100	H=25
C15.10.	100	25

OMCR CODE	A	H
C15.10.10025	100	25

C15.11

OMCR

SLEEVE - FÜHRUNGSEINHEIT - CANOTTO GUIDA

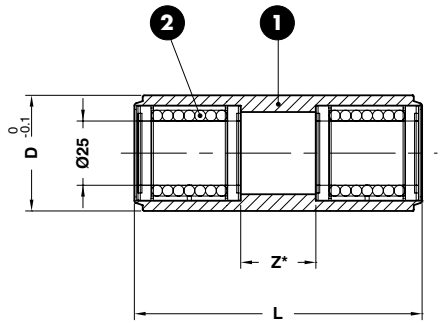

STOCK

WEB

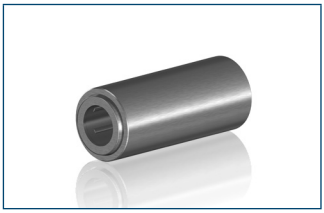

Notes

1. **Material:** CK45
2. **Material:** STAR 0658-225-40

Application example

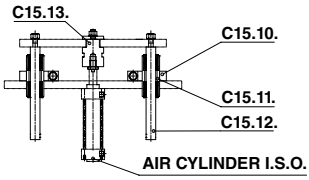

ORDER EXAMPLE

Art.	D=45	L=112
C15.11.	45	112

* Fixing zone
Befestigungsbereich Klammer
Zona di fissaggio

OMCR CODE	D	L	Z
C15.11.45112	45	112	40
C15.11.45200	45	200	120

OMCR

GUIDE POST - FÜHRUNGSSAULE - COLONNA

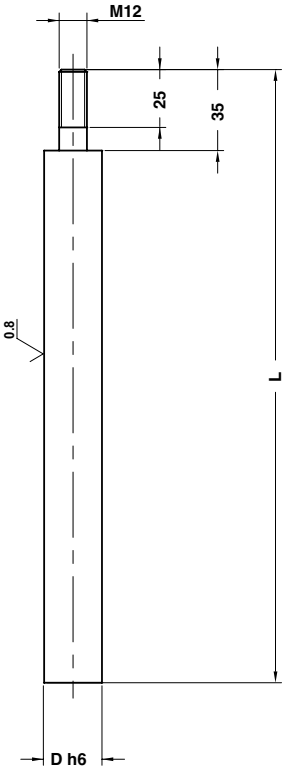

STOCK

3D WEB

Notes

Material: CK45
HRC: 60÷62

Application example

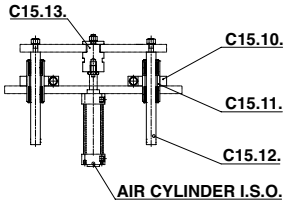

ORDER EXAMPLE

Art.	D=25	L=265
C15.12.	25	265

OMCR CODE	D	L
C15.12.25265	25	265
C15.12.25350	25	350
C15.12.25400	25	400
C15.12.25450	25	450
C15.12.25500	25	500

UNION NUT - BEFESTIGUNGSELEMENT - DADO DI UNIONE

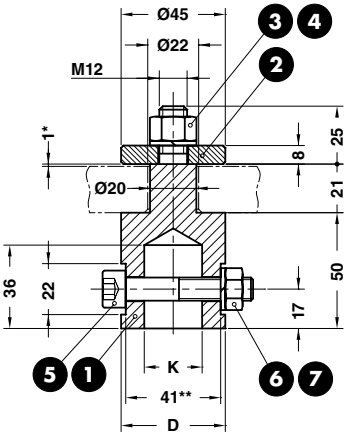

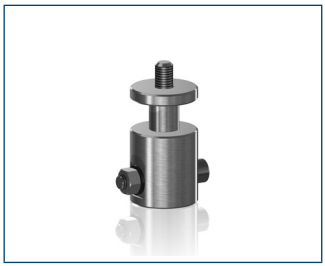

STOCK ... 3D WEB

Notes

1 2 **Material:** CK45
3 M12 DIN 934
4 Ø12 DIN 127B
5 M10X55 DIN 912
6 M10 DIN 934
7 Ø10 DIN 127B

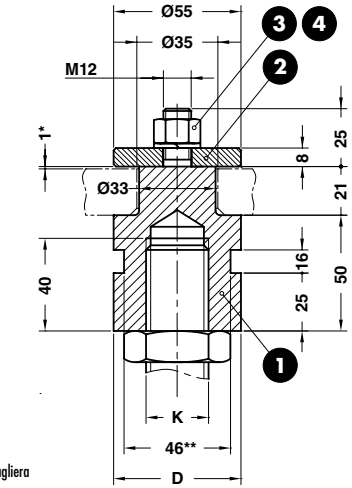

* Backlash
Spiel
Gioco

** Spanner
Schlussel
Chiave

*** Rackwork
Zahnstange-antireb
Sollevatore a cremagliera

Application example FORM A

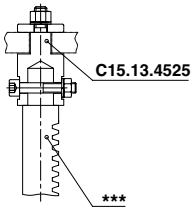

Application example FORM B

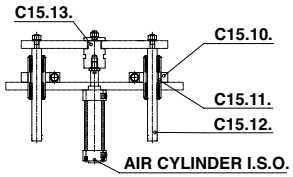

ORDER EXAMPLE

Art.	D=45	K=25
C15.13.	45	25

OMCR CODE	D	K	FORM
C15.13.4525	45	25	A
C15.13.5516	55	M16x1,5	B
C15.13.5520	55	M20x1,5	B
C15.13.5527	55	M27x2	B

OMCR

AIR COUPLING BRACKET - LUFTANSCHLUSSBLOCK - SUPPORTO INNESTI RAPIDI

STOCK

3D WEB

"FORM A"

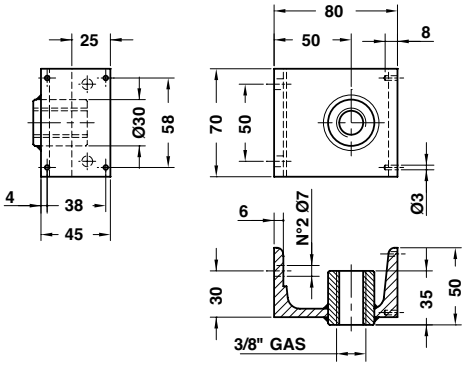

"FORM B"

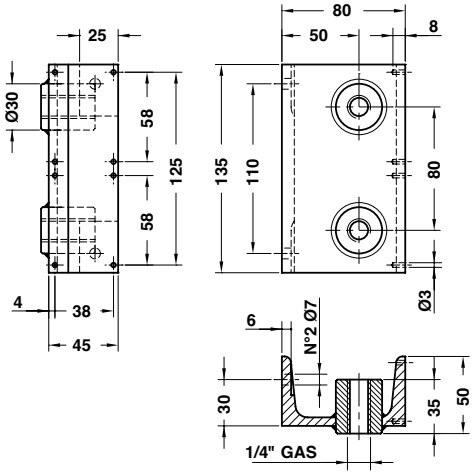

Notes

Material: St37

ORDER EXAMPLE	Art.	FORM
	C15.14.	A

OMCR CODE	FORM
C15.14.	A
C15.14.	B

FLUX CONTROL - VERTEILERBLOCK - REGOLATORE DI FLUSSO

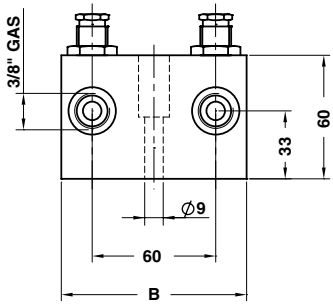

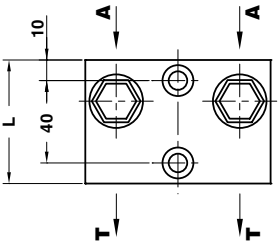

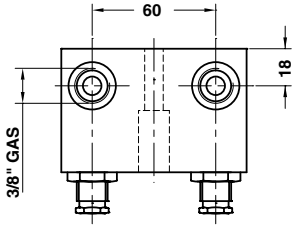

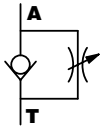

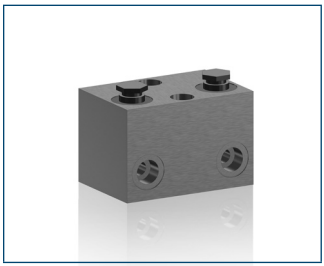

STOCK

3D WEB

Notes

Material: CK45

ORDER EXAMPLE	Art.	A=60	B=90
	C15.15.	60	90

OMCR CODE	A	B
C15.15.6090	60	90

C16.18

OMCR

ROLLER - ROLLE - ROTELLA

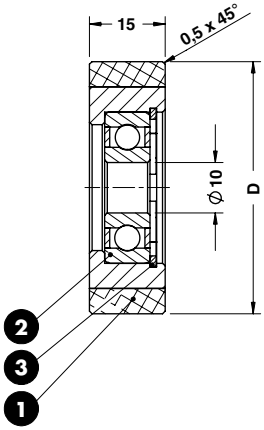

STOCK

WEB

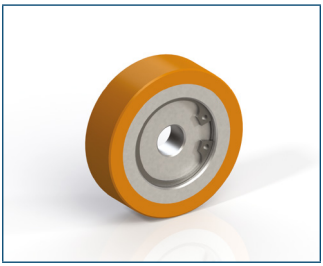

Notes

1. **Material:** Steel+Vulkolan
2. Roller Bearing 6200 2RS
3. I30 DIN472

ORDER EXAMPLE	Art.	D=50
	C16.18.	50

OMCR CODE	D	Max Load (daN)
C16.18.	50	70

C16.19

OMCR

ROLLER - ROLLE - ROTELLA

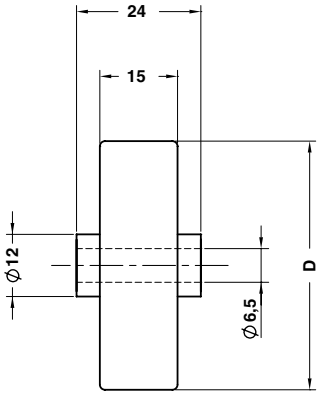

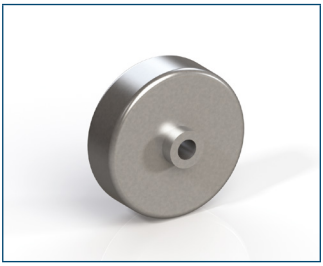

STOCK

WEB

Notes

Material: Steel

ORDER EXAMPLE	Art.	D=48
	C16.19.	48

OMCR CODE	D	Max Load (daN)
C16.19.	48	25

ROLLER STOCK LIFTER - FEDERNDE LAUFROLLE - RULLINO SOLLEVAMENTO NASTRO

TYPE 01

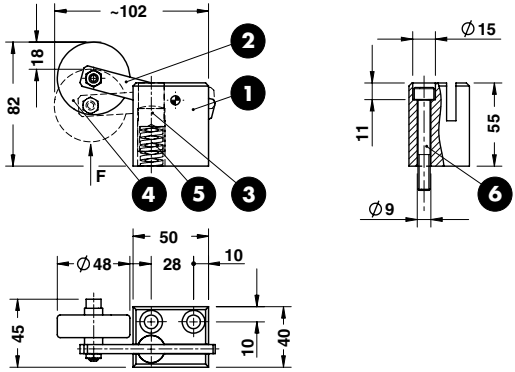

TYPE 02

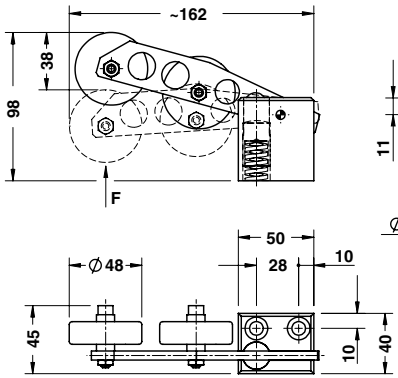

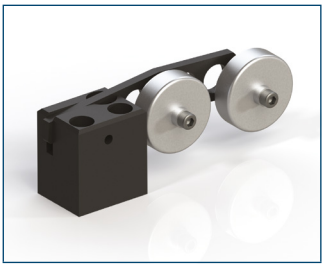

STOCK ... 3D WEB

Notes

1. **Material:** C15
2. **Material:** S235JRG2K
3. **Material:** 42CrMo4
4. C16.19.48
5. Spring
6. Screws M8x60 DIN 912

ORDER EXAMPLE	Art.	TYPE
	C16.20.	01

OMCR CODE	F (N)	TYPE
C16.20.01	66	01
C16.20.02	32	02
C16.20.03	66	03
C16.20.04	66	04

TYPE 03

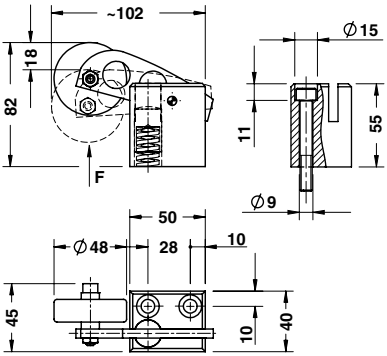

TYPE 04

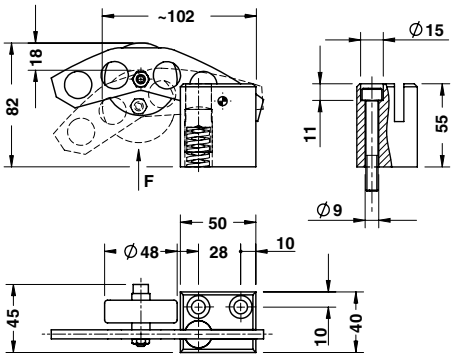

ROLLER STOCK LIFTER - FEDERNDE LAUFROLLE - RULLINO SOLLEVAMENTO NASTRO

TYPE 20

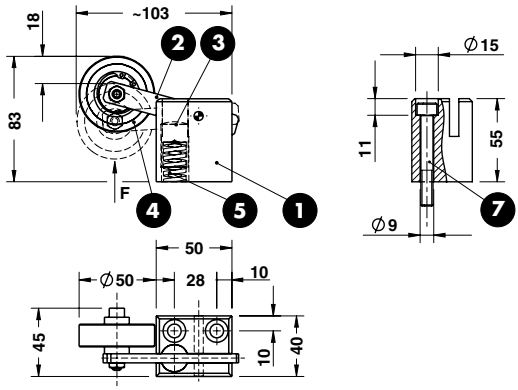

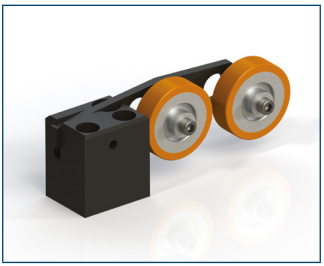

STOCK ... 3D WEB

Notes

1. **Material:** C15
2. **Material:** S235JRG2K
3. **Material:** 42CrMo4
4. C16.18.50
5. Spring
6. **Material:** steel
7. Screws M8x60 DIN 912

ORDER EXAMPLE	Art.	TYPE
	C16.20.	20

TYPE 21

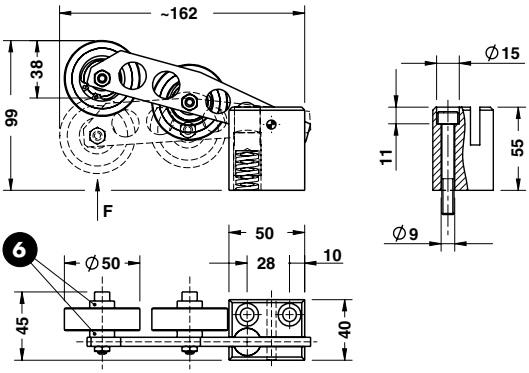

OMCR CODE	F (N)	TYPE
C16.20.20	66	20
C16.20.21	32	21
C16.20.22	66	22
C16.20.23	66	23

TYPE 22

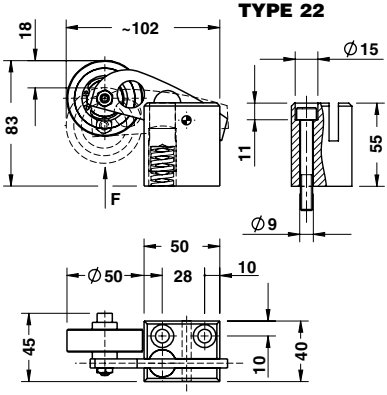

TYPE 23

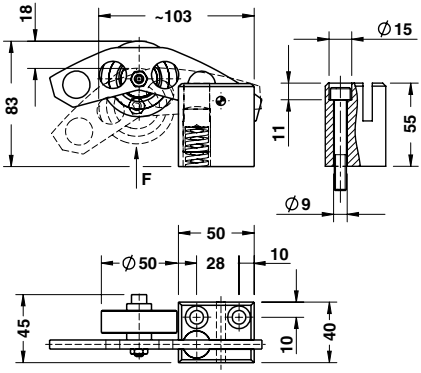

ROLLER GROUP - FÖRDERROLLE - GRUPPO RULLINI

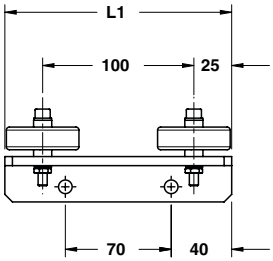

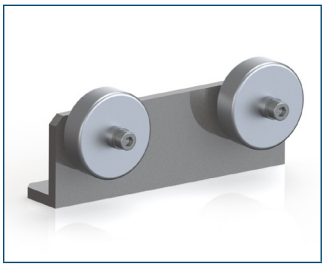

STOCK ... 3D WEB

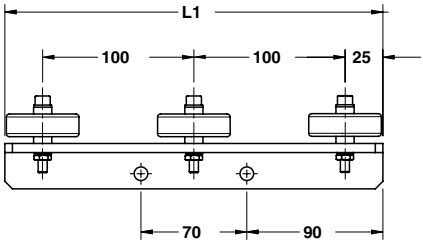

Notes

1. **Material:** St37
2. 3 Washers for M6
4. Nut for M6
5. Screw M6x40 DIN 912
6. **Material:** Steel - C16.19.48

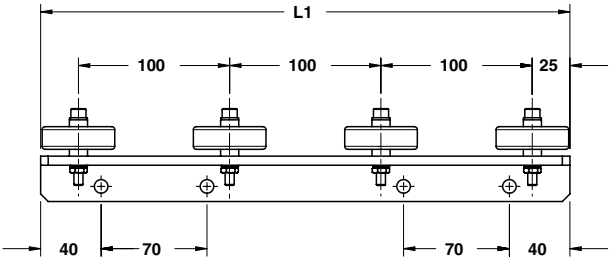

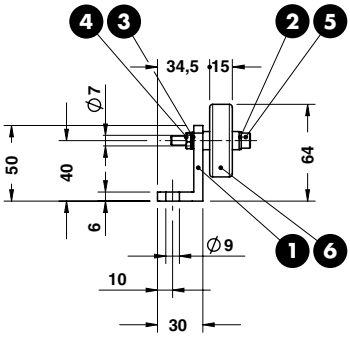

ORDER EXAMPLE	Art.	L1
	C16.21.	150

OMCR CODE	L1	Max Load (daN)
C16.21.150	150	50
C16.21.250	250	75
C16.21.350	350	100

OMCR

COIL SUPPORT - ABSTREIFER - SOLLEVATORE NASTRO

Notes

1. **Material:** CK45
2. **Material:** Bronze - **HB**>190
3. SPRING
4. M6x8 DIN 913
5. Ø12x60 DIN 6325

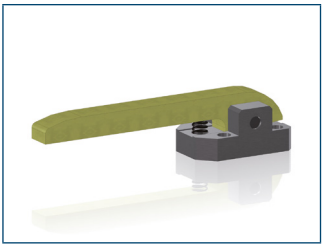

STOCK ... 3D WEB

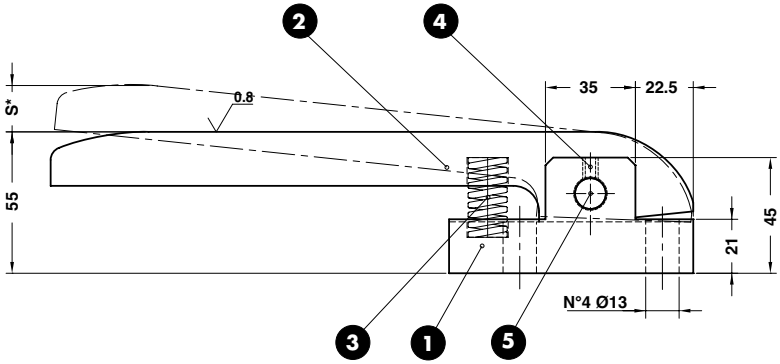

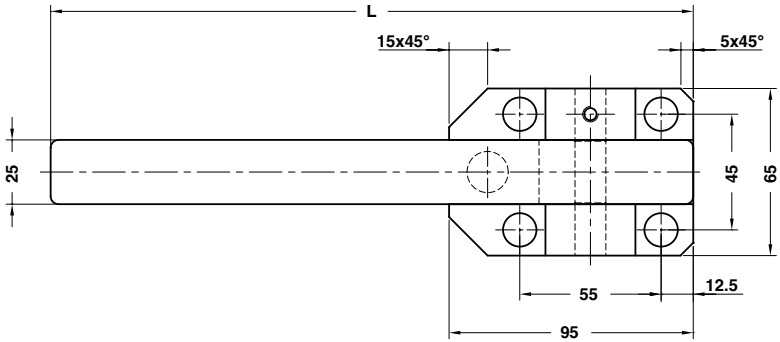

ORDER EXAMPLE	Art.	TYPE
	C16.25.	01

OMCR CODE	L	S	Spring	Spring initial force (daN)	Spring final force (daN)	TYPE
C16.25.01	250	18	TV016044	7,9 N	12,3 N	01
C16.25.02	250	18	B16044	27 N	42 N	02
C16.25.03	300	30	B16044	24 N	42 N	03

OMCR

BALL CASTER - KUGELROLLENSYSTEM - SFERA PORTANTE

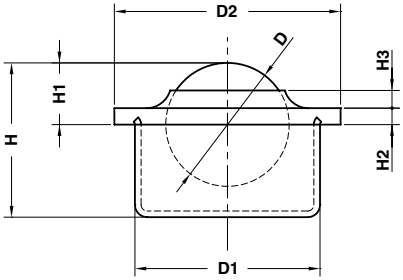

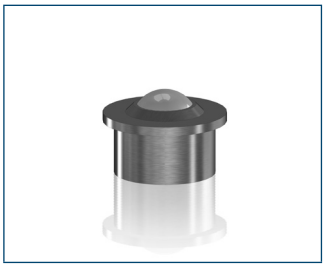

STOCK

3D WEB

Notes

Material: Steel

ORDER EXAMPLE	Art.	D=15
	C16.26.	15

OMCR CODE	D	D1	D2	Max load (daN)	H	H1	H2	H3
C16.26.15	15	24±0,065	31	50	21,5	9,5±0,2	2,8	3,5
C16.26.30	30	45±0,080	55	250	37,5	13,8±0,3	4	4,3

OMCR

COIL GUIDE ROLLER - FÜHRUNGSROLLE - GUIDA NASTRO

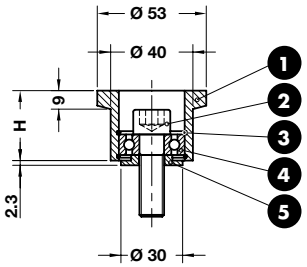

TYPE 01

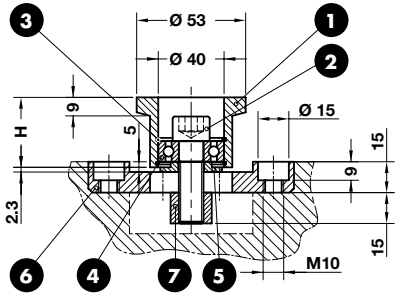

TYPE 02

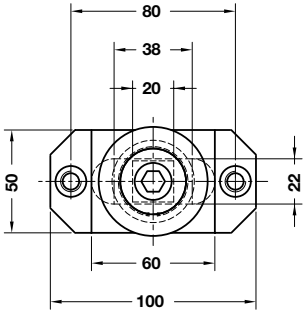

ORDER EXAMPLE	Art.	TYPE	H=34
	C16.27.	01	34

OMCR CODE	TYPE	H
C16.27.0117	01	17
C16.27.0134	01	34
C16.27.0154	01	54
C16.27.0180	01	80
C16.27.0217	02	17
C16.27.0234	02	34
C16.27.0254	02	54
C16.27.0280	02	80

TYPE 01

STOCK ... 3D WEB

Notes TYPE 01

1. **Material:** 16MnCr5 - **HRC:** 55÷58
2. M12x40 DIN 472
3. I32 DIN 472
4. 6201 2Z VA DIN 625
5. **Material:** CK45

TYPE 02

STOCK ... 3D WEB

Notes TYPE 02

1. **Material:** 16MnCr5 - **HRC:** 55÷58
2. M12x40 DIN 472
3. I32 DIN 472
4. 6201 2Z VA DIN 625
5. **Material:** CK45
6. **Material:** St37
7. **Material:** CK45

OMCR

FLANGE LIFTER - ABSTREIFER - SFLANGIATORE

⚠

Do not exceed the stroke
Hub nicht überschreiten
Non superare la corsa

Notes

1. **Material:** EN-GJL300
2. **Material:** Bronze + Graphite - **HB**>190
3. **Material:** 36NiCrMo4
4. M8x25 DIN 912
5. Schnorr Ø8
6. Gas Spring
7. M6x12 DIN 7991

STOCK

3D WEB

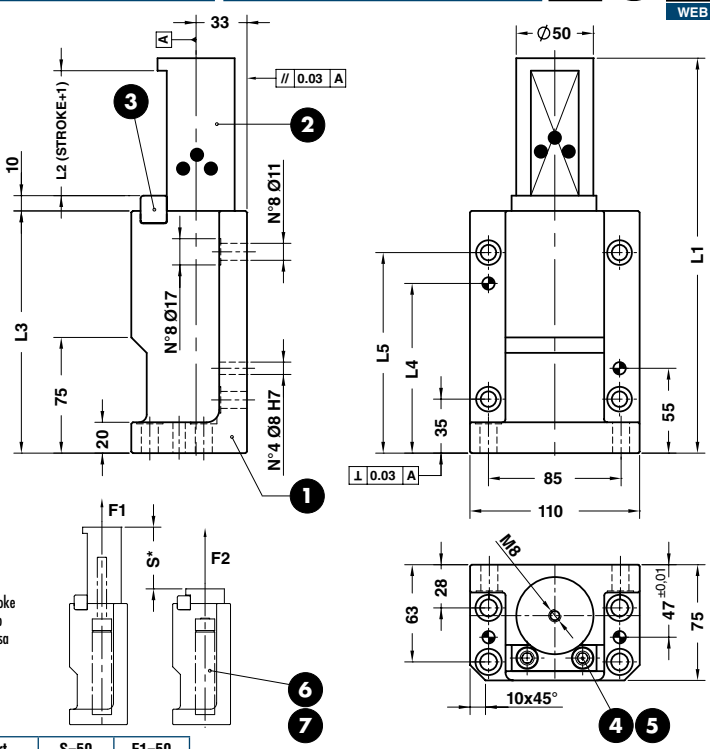

ORDER EXAMPLE	Art.	S=50	F1=50
	C16.30.	50	050

OMCR CODE	F1 (daN)	F2 (daN)	L1	L2	L3	L4	L5	S
C16.30.50050	50	86	196	51	127	80	100	50
C16.30.50100	100	172	196	51	127	80	100	50
C16.30.50150	150	258	196	51	127	80	100	50
C16.30.50200	200	344	196	51	127	80	100	50
C16.30.80050	50	86	256	81	157	110	130	80
C16.30.80100	100	172	256	81	157	110	130	80
C16.30.80150	150	258	256	81	157	110	130	80
C16.30.80200	200	344	256	81	157	110	130	80

OMCR

FLANGE LIFTER - ABSTREIFER - SFLANGIATORE

Do not exceed the stroke
Hub nicht überschreiten
Non superare la corsa

Notes

1. **Material:** EN-GJL300
2. **Material:** Bronze + Graphite - **HB**>190
3. **Material:** 36NiCrMo4
4. M8x25 DIN 912
5. Schnorr Ø8
6. Gas Spring
7. M6x12 DIN 7991

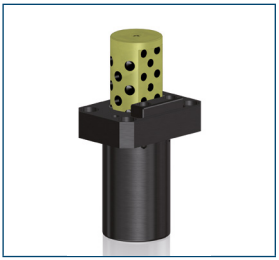

STOCK

WEB

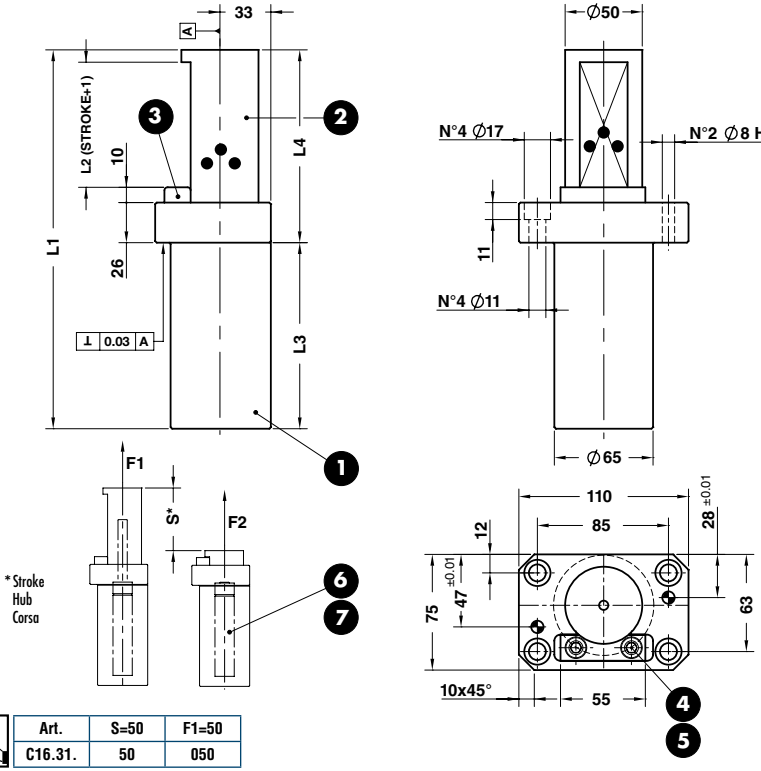

ORDER EXAMPLE	Art.	S=50	F1=50
	C16.31.	50	050

OMCR CODE	F1 (daN)	F2 (daN)	L1	L2	L3	L4	S
C16.31.50050	50	86	196	51	101	95	50
C16.31.50100	100	172	196	51	101	95	50
C16.31.50150	150	258	196	51	101	95	50
C16.31.50200	200	344	196	51	101	95	50
C16.31.80050	50	86	256	81	131	125	80
C16.31.80100	100	172	256	81	131	125	80
C16.31.80150	150	258	256	81	131	125	80
C16.31.80200	200	344	256	81	131	125	80

SPRING PLUNGER - FEDERNE DRUCKSTÜCKE - ESPULSORE A MOLLA

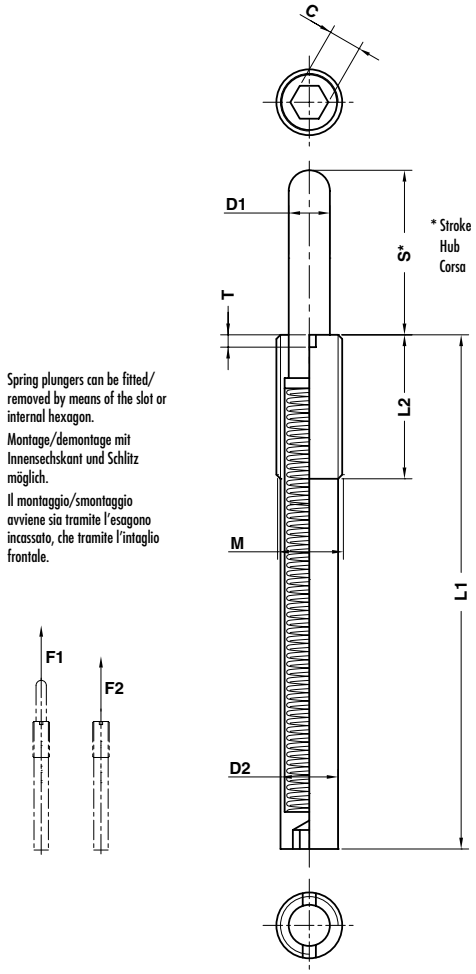

Spring plungers can be fitted/ removed by means of the slot or internal hexagon.

Montage/demontage mit Innensechskant und Schlitz möglich.

Il montaggio/smontaggio avviene sia tramite l'esagono incassato, che tramite l'intaglio frontale.

STOCK

3D WEB

Notes

Material: Steel

ORDER EXAMPLE	Art.	M=M16	S=40
	C16.40.	M16	40

OMCR CODE	C	D1	D2	F1 (N)	F2 (N)	L1	L2	M	S	T
C16.40.M1210	4	5,5	9,5	7	40	45	35	M12	10	2
C16.40.M1615	5	8	13,4	15	80	60	35	M16	15	3
C16.40.M1620	5	8	13,4	17	80	85	35	M16	20	3
C16.40.M1630	5	8	13,4	20	80	125	35	M16	30	3
C16.40.M1640	8	8	13,4	20	80	125	35	M16	40	3
C16.40.M1650	8	8	13,4	30	100	155	35	M16	50	3
C16.40.M1660	8	8	13,4	20	80	155	35	M16	60	3
C16.40.M2415	8	10	19,6	40	200	60	45	M24	15	3
C16.40.M3020	12	15	22,5	50	300	80	45	M30	20	3

OMCR

SPRING PLUNGER - FEDERNE DRUCKSTÜCKE - ESPULSORE A MOLLA

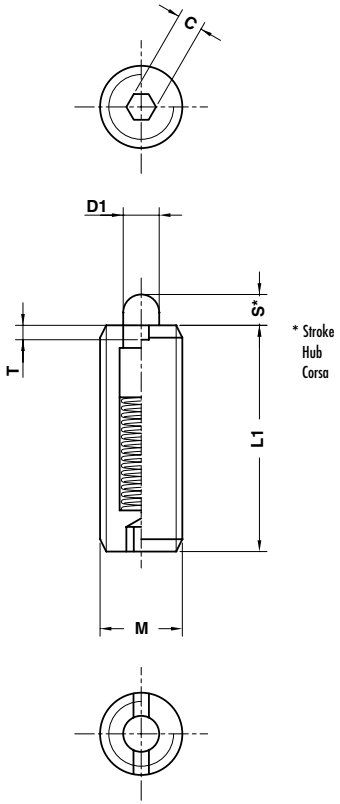

STOCK

3D WEB

Notes

Material: Steel

ORDER EXAMPLE

Art.	M=M3
C16.45.	M03

OMCR CODE	C	D1	F1 (N)	F2 (N)	L1	M	S	T
C16.45.M03	0,7	1	2	4	10	M3	1,5	0,5
C16.45.M04	1,3	1,6	5	16	12	M4	2	0,6
C16.45.M05	1,5	2	6	19	20	M5	3	0,8
C16.45.M06	2	2,5	6	19	25	M6	3	0,9
C16.45.M08	2,5	3,1	10	39	25	M8	4	1,4
C16.45.M10	3	3,8	10	39	30	M10	5	1,4
C16.45.M12	4	5,5	12	53	30	M12	5	2

SPRING RAMS - FEDERBOLZEN - SOLLEVATORE

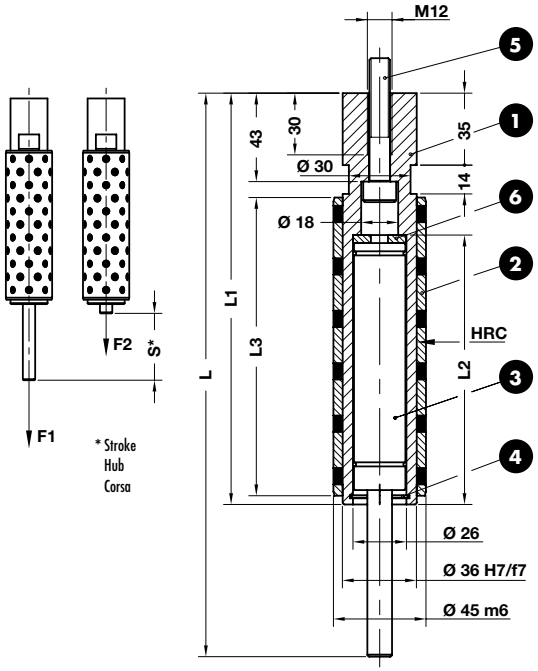

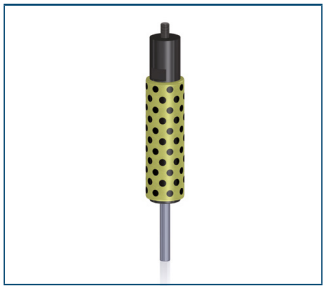

STOCK ... 3D WEB

Notes

1. **Material:** CK45 - **HRC:** 58÷62
2. **Material:** Bronze+Graphite - **HB**>190
3. Gas Spring
4. DIN 472
5. M10x60 DIN 912
6. **Material:** 90MnCrV8 - **HRC:** 54÷60

ORDER EXAMPLE

Art.	S=50	F1=50
C16.50.	50	050

OMCR CODE	F1 (daN)	F2 (daN)	L	L1	L2	L3	S
C16.50.50050	50	68	240	182	118	115	50
C16.50.50100	100	136	240	182	118	115	50
C16.50.50150	150	204	240	182	118	115	50
C16.50.50200	200	272	240	182	118	115	50
C16.50.65050	50	68	274	200	135	145	65
C16.50.65100	100	136	274	200	135	145	65
C16.50.65150	150	204	274	200	135	145	65
C16.50.65200	200	272	274	200	135	145	65
C16.50.80050	50	68	314	220	155	170	80
C16.50.80100	100	136	314	220	155	170	80
C16.50.80150	150	204	314	220	155	170	80
C16.50.80200	200	272	314	220	155	170	80

MCR

ELASTOMER SPRING - ELASTOMERFEDER - MOLLA IN ELASTOMERO

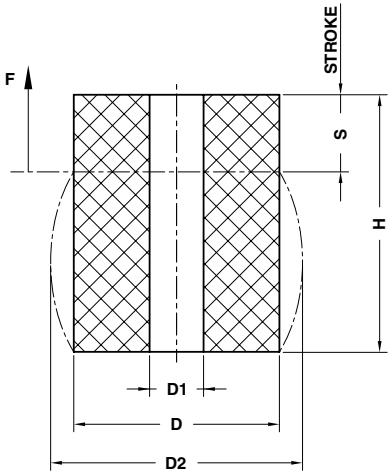

STOCK

3D WEB

S = max. 30% H

Notes

Material: Elastomer 92SH

ORDER EXAMPLE	Art.	D=63	H=80
	C17.10.	063	080

D	16	20	25	32	40	50	63	80	100	125
D1	6,5	8,5	10,5	13,5	13,5	17	17	21	21	27
D2	19	26	30	41	50	62	78	98	120	152
F (daN)	130	200	300	580	1250	1700	2600	4300	5900	9900

H	S										
16	4,8	•	•	•	•						
20	6	•	•	•	•	•					
25	7,5	•	•	•	•	•	•				
32	9,6	•	•	•	•	•	•	•			
40	12		•	•	•	•	•	•	•		
50	15			•	•	•	•	•	•	•	
63	19				•	•	•	•	•	•	•
80	24					•	•	•	•	•	•
100	30						•	•	•	•	•
125	37,5							•	•	•	•
160	48								•	•	•

LOAD DIAGRAMS FOR ELASTOMER SPRINGS 92SH
KRAFT-WEG-DIAGRAMM ELASTOMERFEDERN 92SH
DIAGRAMMI DI CARICO MOLLE IN ELASTOMERO 92SH

Ø16 x Ø6,5 x H

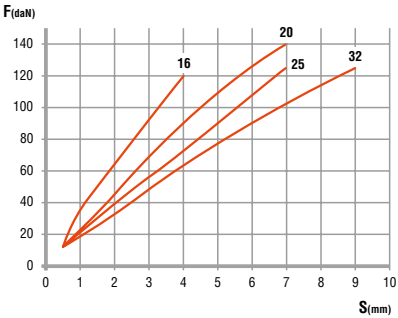

Ø20 x Ø8,5 x H

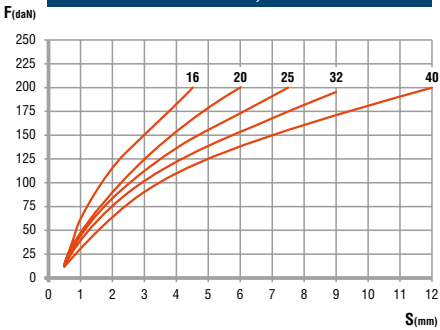

Ø25 x Ø10,5 x H

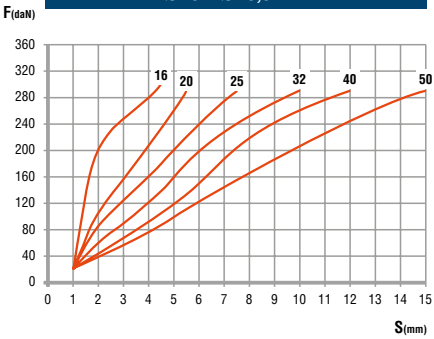

Ø32 x Ø13,5 x H

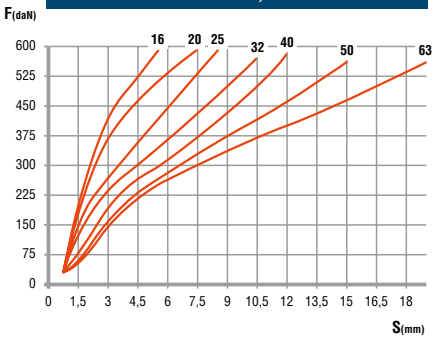

Ø40 x Ø13,5 x H

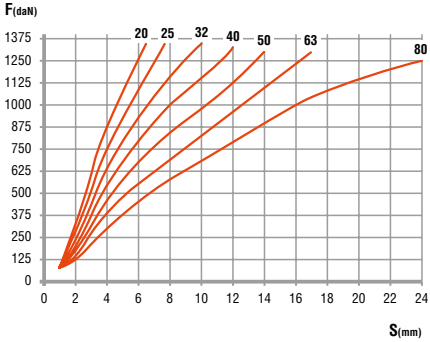

LOAD DIAGRAMS FOR ELASTOMER SPRINGS 92SH
KRAFT-WEG-DIAGRAMM ELASTOMERFEDERN 92SH
DIAGRAMMI DI CARICO MOLLE IN ELASTOMERO 92SH

Ø50 x Ø17 x H

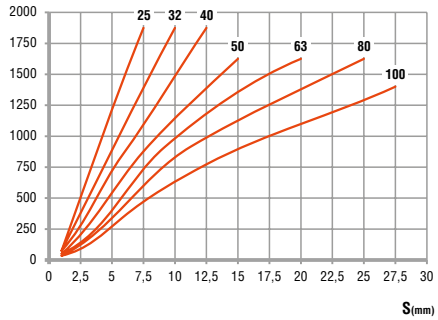

Ø63 x Ø17 x H

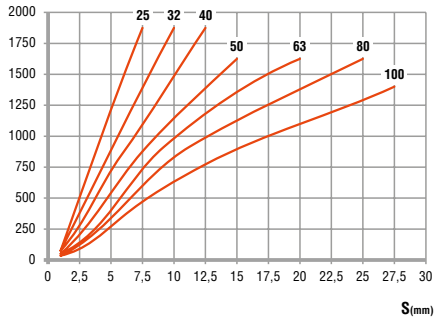

Ø80 x Ø21 x H

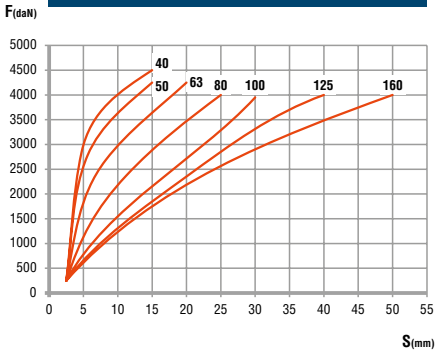

Ø100 x Ø21 x H

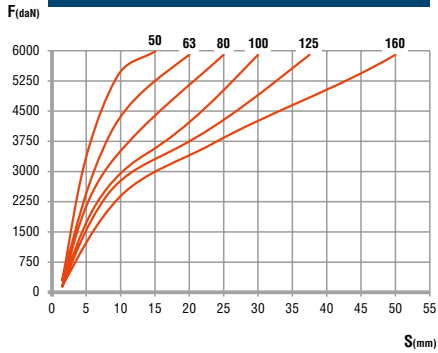

Ø125 x Ø27 x H

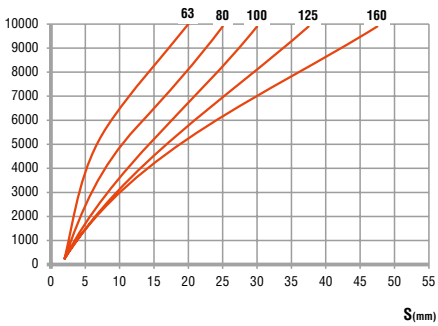

OMCR

ELASTOMER SPRING - ELASTOMERFEDER - MOLLA IN ELASTOMERO

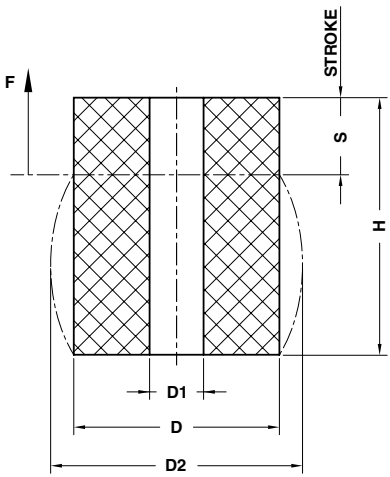

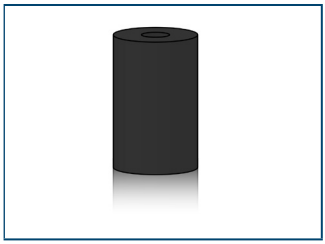

STOCK 3D WEB

Notes

Material: Elastomer 70 Shore

ORDER EXAMPLE	Art.	D=63	H=80
	C17.11.	063	080

D	16	20	25	32	40	50	63	80	100	125
D1	6,5	8,5	10,5	13,5	13,5	17	17	21	21	27
D2	19	26	30	41	50	62	78	98	120	152
F (daN)	40	50	90	225	400	600	1000	1800	3000	5000

H	S										
12	4,8	•									
16	6,4	•	•								
20	8	•	•	•							
25	10	•	•	•							
32	12,8		•	•	•	•	•	•	•	•	•
40	16			•	•	•	•	•	•	•	•
50	20				•	•	•	•	•	•	•
63	25,2				•	•	•	•	•	•	•
80	32					•	•	•	•	•	•
100	40						•	•	•	•	•
125	50							•	•	•	•
160	64										•

LOAD DIAGRAMS FOR ELASTOMER SPRINGS 70 SHORE
KRAFT-WEG-DIAGRAMM ELASTOMERFEDERN 70 SHORE
DIAGRAMMI DI CARICO MOLLE IN ELASTOMERO 70 SHORE

Ø16 x Ø6,5 x H

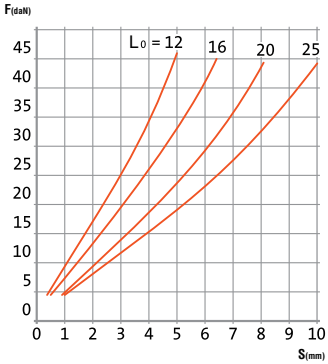

Ø20 x Ø8,5 x H

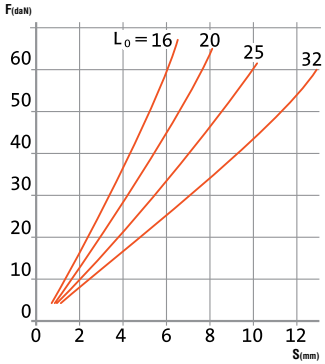

Ø25 x Ø10,5 x H

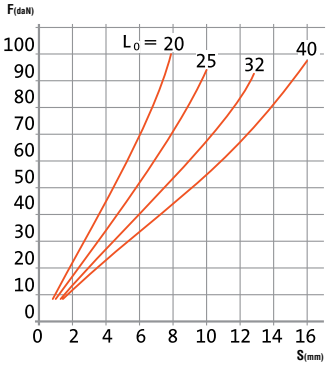

Ø32 x Ø13,5 x H

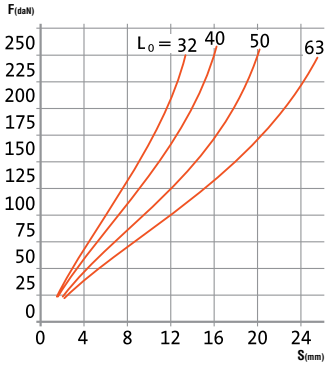

Ø40 x Ø13,5 x H

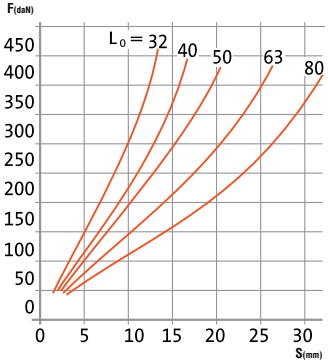

LOAD DIAGRAMS FOR ELASTOMER SPRINGS 70 SHORE
KRAFT-WEG-DIAGRAMM ELASTOMERFEDERN 70 SHORE
DIAGRAMMI DI CARICO MOLLE IN ELASTOMERO 70 SHORE

Ø50 x Ø17 x H

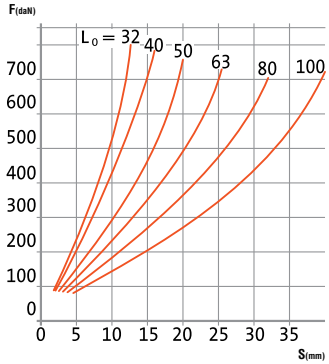

Ø63 x Ø17 x H

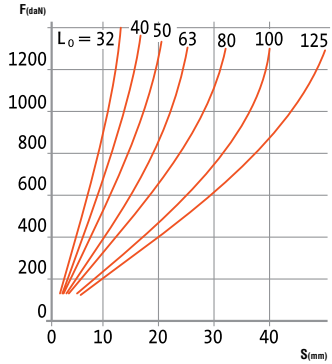

Ø80 x Ø21 x H

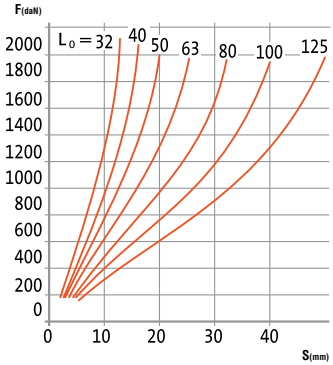

Ø100 x Ø21 x H

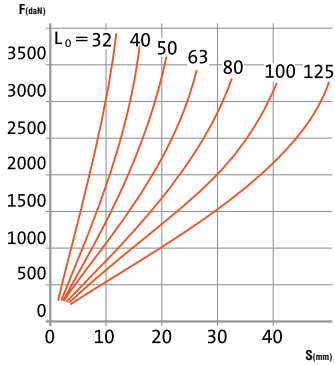

Ø125 x Ø27 x H

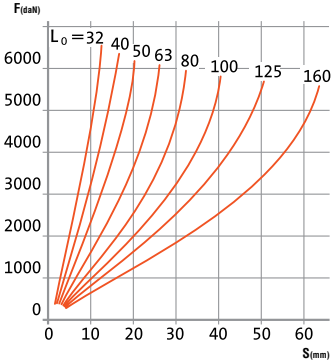

C17.15

OMCR

ELASTOMER STRIPPER - ABSTREIFER - ESTRATTORE PER PUNZONI

STOCK

3D WEB

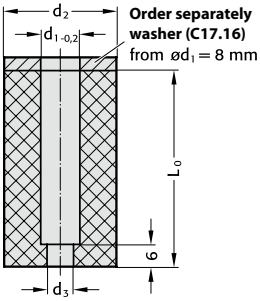

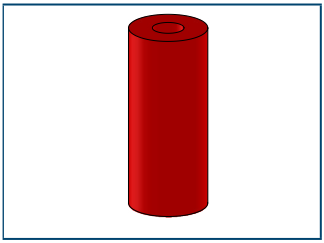

Notes

Material: Elastomer 95SH

Application example

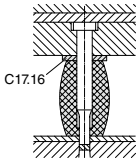

ORDER EXAMPLE

Art.	D1 = 4	L
C17.15.	04	39

CODE	d1	d2	d3	L
C17.15.0439	4	17	1,6	39
C17.15.0447	4	17	1,6	47
C17.15.0456	4	17	1,6	56
C17.15.0639	6	19	1,6	39
C17.15.0647	6	19	1,6	47
C17.15.0656	6	19	1,6	56
C17.15.0839	8	21	3	39
C17.15.0847	8	21	3	47
C17.15.0856	8	21	3	56
C17.15.1039	10	23	3	39
C17.15.1047	10	23	3	47
C17.15.1056	10	23	3	56

CODE	d1	d2	d3	L
C17.15.1339	13	26	3	39
C17.15.1347	13	26	3	47
C17.15.1356	13	26	3	56
C17.15.1639	16	30	3	39
C17.15.1647	16	30	3	47
C17.15.1656	16	30	3	56
C17.15.2039	20	38	3	39
C17.15.2047	20	38	3	47
C17.15.2056	20	38	3	56
C17.15.2539	25	50	3	39
C17.15.2547	25	50	3	47
C17.15.2556	25	50	3	56

C17.16

OMCR

WASHER - SCHEIBE - RONDELLA

STOCK

3D WEB

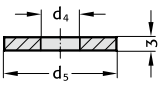

ORDER EXAMPLE

Art.	D4 = 8,5
C17.16.	085

CODE	d4	d5
C17.16.085	8,5	21
C17.16.105	10,5	23
C17.16.130	13	26
C17.16.135	13,5	26
C17.16.165	16,5	30

CODE	d4	d5
C17.16.205	20,5	38
C17.16.255	25,5	50
C17.16.325	32,5	55
C17.16.385	38,5	60
C17.16.405	40,5	63

Notes

Material: Steel

ELASTOMER STRIPPER - ABSTREIFER - ESTRATTORE PER PUNZONI

STOCK

3D WEB

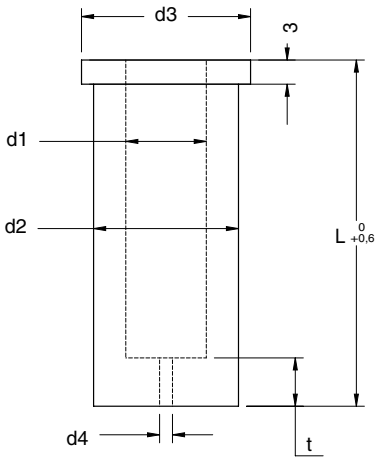

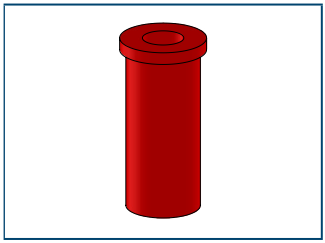

Notes

Material: Elastomer 95SH A

Application example

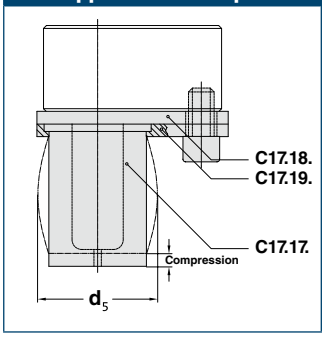

* values for the stripping force are dependent on a number of parameters (e.g. lubricant, temperature etc.) and may vary from those given here.
** max spring travel should not exceed 15% of the length

ORDER EXAMPLE

Art.	d1	L
C17.17.	10	43

CODE	d1	d2	d3	d4	d5	t	L
C17.17.1043	10	18	21	1,6	22	6	43
C17.17.1053	10	18	21	1,6	22	6	53
C17.17.1063	10	18	21	1,6	22	6	63
C17.17.1343	13	23	26	3	26,5	6	43
C17.17.1353	13	23	26	3	26,5	6	53
C17.17.1363	13	23	26	3	26,5	6	63
C17.17.1373	13	23	26	3	26,5	6	73
C17.17.1643	16	28	31	3	34	6	43
C17.17.1653	16	28	31	3	34	6	53
C17.17.1663	16	28	31	3	34	6	63
C17.17.1673	16	28	31	3	34	6	73
C17.17.2043	20	33	36	3	38	7	43
C17.17.2053	20	33	36	3	38	7	53
C17.17.2063	20	33	36	3	38	7	63
C17.17.2073	20	33	36	3	38	7	73
C17.17.2543	25	40	43	3	47,5	7	43
C17.17.2553	25	40	43	3	47,5	7	53
C17.17.2563	25	40	43	3	47,5	7	63
C17.17.2573	25	40	43	3	47,5	7	73

STROKE**	3mm	6mm	9mm	3mm	6mm	9mm	3mm	6mm	9mm	3mm	6mm	9mm
LENGHT	43	43	43	53	53	53	63	63	63	73	73	73
d1	Stripping forces (N)*											
10	1060	1820	-	900	1650	-	720	1450	1860	-	-	-
13	1700	2850	-	1460	2610	-	1170	2320	2910	930	2080	2500
16	2310	3900	-	1990	3560	-	1590	3150	3980	1270	2810	3440
20	2900	4900	-	2500	4470	-	2000	3950	5000	1590	3420	4330
25	4440	7520	-	3810	6860	-	3050	6050	7680	2420	5390	6780

C17.18

OMCR

STRIPPING UNIT- PRESSURE PLATE
ABSTREIFER - DRUCKPLATTE
PIASTRA PREMENTE DELL´ESTRATTORE

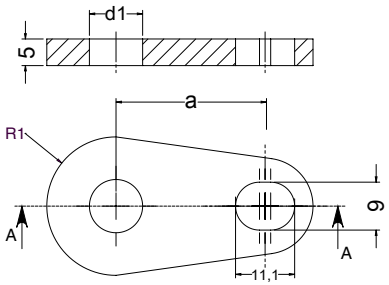

STOCK

3D WEB

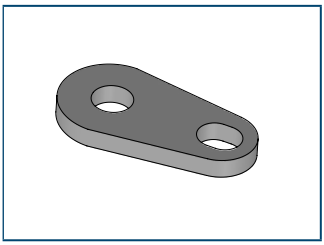

ORDER EXAMPLE

Art.	d1 = 10
C17.18.	010

Notes

Material: St37

CODE	d1	R1	A
C17.18.010	10	13	28
C17.18.013	13	15,5	31
C17.18.016	16	18	32,9
C17.18.020	20	20,5	34,8
C17.18.025	25	24	39,8

C17.19

OMCR

STRIPPING UNIT - MOUNTING PLATE
ABSTREIFER - HALTEPLATTE
PIASTRA DI FISSAGGIO DELL´ESTRATTORE

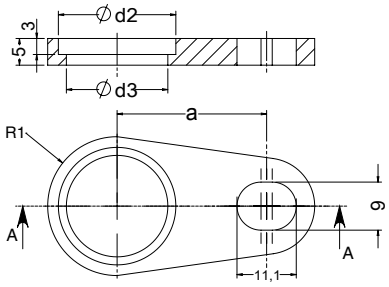

STOCK

3D WEB

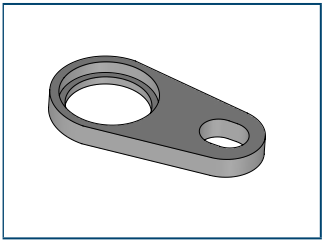

ORDER EXAMPLE

Art.	d1 = 10
C17.19.	010

Notes

Material: St37

CODE	d1	d2	d3	R1	A
C17.19.010	10	22	19	13	28
C17.19.013	13	27	24	15,5	31
C17.19.016	16	32	29	18	32,9
C17.19.020	20	37	34	20,5	34,8
C17.19.025	25	44	41	24	39,8

C17.20

OMCR

ELASTOMER CAP - ELASTOMERDRUCKSTÜCK - PUNTALINO IN ELASTOMERO

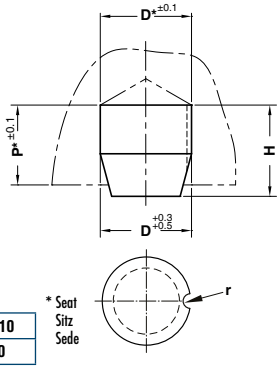

STOCK

3D WEB

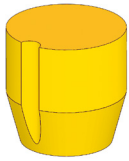

ORDER EXAMPLE	Art.	D=6	H=10
	C17.20.	06	10

OMCR CODE	D	F max. (N)	H	P	r
C17.20.0610	6	100	10	8	0
C17.20.1015	10	450	15	13	1
C17.20.1625	16	1500	25	21	1,5
C17.20.2425	24	3000	25	20	2
C17.20.3035	30	3000	35	30	2,5
C17.20.3232	32	12000	32	26	3
C17.20.3940	39,5	25000	40	34	3
C17.20.4040	40	25000	40	35	3

Notes

Material: Elastomer 90SH

C17.21

OMCR

SHOCK ABSORBER - HALTEELEMENT - AMMORTIZZATORE

3D WEB

STOCK

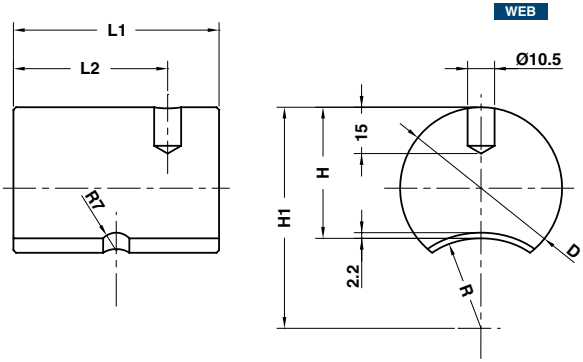

ORDER EXAMPLE	Art.	D=50	L1=80
	C17.21.	50	80

OMCR CODE	D	H	H1	L1	L2	R
C17.21.4060	40	32	50	60	45	18
C17.21.5080	50	40	63	80	60	23
C17.21.6380	63	51	86	80	60	35

Notes

Material: Elastomer 92SH

Application example

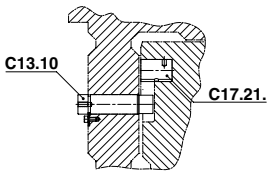

OMCR

ANTI-REBOUND ELASTOMER - DÄMPFUNGSELEMENT - AMMORTIZZATORE ANTIRIMBALZO

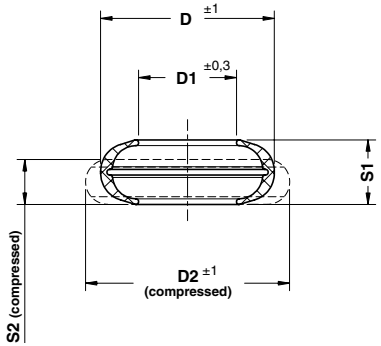

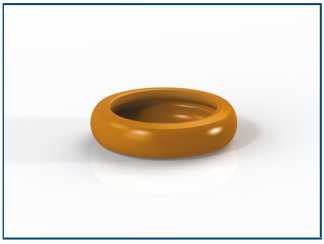

STOCK

3D WEB

Notes

Material: CO-Polyester Elastomer

ORDER EXAMPLE	Art.	D=32,1	S1=10,8
	C17.27.	321	108

OMCR CODE	D	D1	D2	F max. (daN)	S1	S2
C17.27.262077	26,2	16,3	28,4	550	7,7	5,5
C17.27.321108	32,1	20,3	35,1	900	10,8	6,0
C17.27.463177	46,3	25,3	49,8	2000	17,7	11,6
C17.27.546216	54,6	30,3	61,8	3000	21,6	13,0
C17.27.618215	61,8	36,3	69,9	4600	21,5	13,2
C17.27.782300	78,2	42,8	89,0	7500	30	17,9
C17.27.995332	99,5	55,3	115	9700	33,2	16,5

ELASTOMER SPRING PIN - AUFNAHMEBOLZEN - PERNO PER MOLLE IN ELASTOMERO

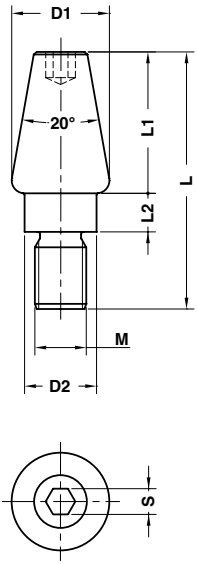

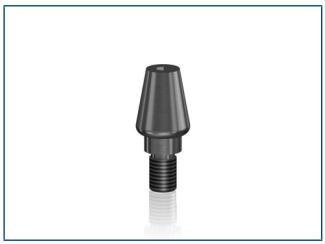

STOCK

3D WEB

Notes

Material: CK45

Application example

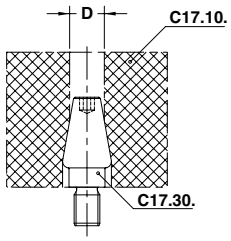

ORDER EXAMPLE

Art.	D1	M=M16
C17.30.	32	M16

OMCR CODE	D	D1	D2	L	L1	L2	M	S
C17.30.28M12	17	28	19	56	30	8	M12	6
C17.30.32M16	21	32	22	74	40	10	M16	8
C17.30.38M20	27	38	28	100	55	15	M20	10

WASHER FOR ELASTOMER SPRINGS - FEDERSCHEIBE - RONDELLA PER MOLLE IN ELASTOMERO

STOCK

3D WEB

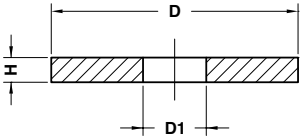

Notes

Material: CK45

Application example

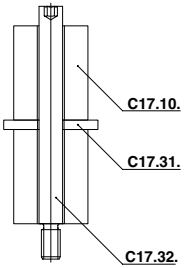

ORDER EXAMPLE	Art.	D=20
	C17.31.	020

OMCR CODE	D	D1	H
C17.31.020	20	6,5	4
C17.31.025	25	8,5	4
C17.31.030	30	10,5	5
C17.31.040	40	13,5	5
C17.31.050	50	13,5	5
C17.31.060	60	16,5	6
C17.31.080	80	16,5	6
C17.31.100	100	20,5	8
C17.31.120	120	20,5	8
C17.31.150	150	26	8

COLUMN DIN 9835 - FÜHRUNGSBOLZEN DIN 9835 - COLONNA DI GUIDA DIN 9835

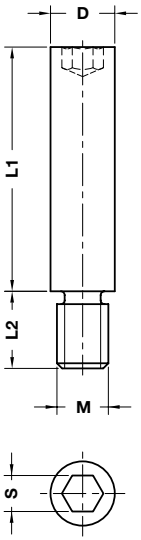

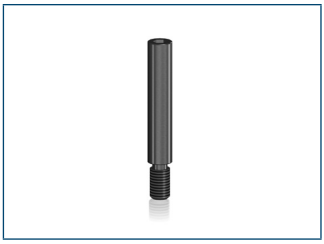

STOCK 3D WEB

Notes

Material: CK45

Application example

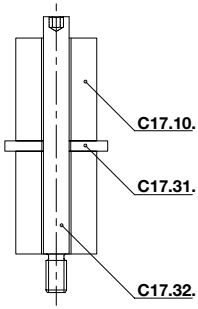

ORDER EXAMPLE

Art.	D=6	L1=20
C17.32.	06	020

D	6	8	10	13	16	20	25
L2	6	9	15	15	18	25	30
M	M4	M6	M8	M10	M12	M16	M20
S	3	4	5	6	8	10	14
L1							
20	•	•	•				
25	•	•	•				
32	•	•	•	•	•	•	•
40		•	•	•	•	•	•
50		•	•	•	•	•	•
63			•	•	•	•	•
80				•	•	•	•
95				•	•	•	•
118					•	•	•
140					•	•	•
180							•

OMCR

STRIPPER FOR BLANKING DIES - ABSTREIFER FÜR PLATINENSCHNITTE - ESTRATTORE PER STAMPI

Application example

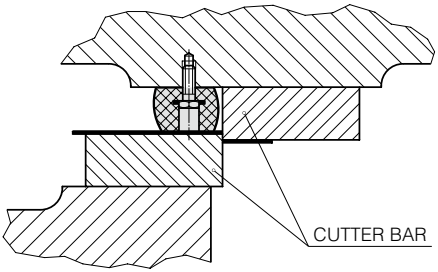

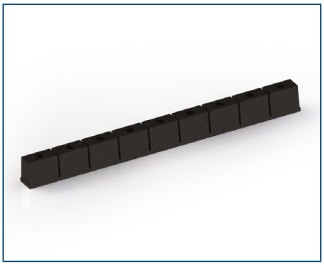

STOCK

3D WEB

Notes

Material: Elastomer 70 SH

C17.40.11270

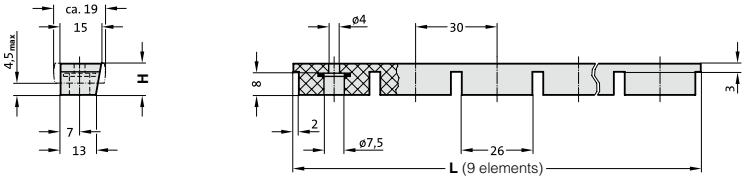

C17.40.16270

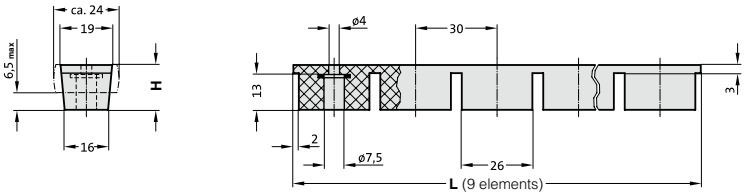

C17.40.27306

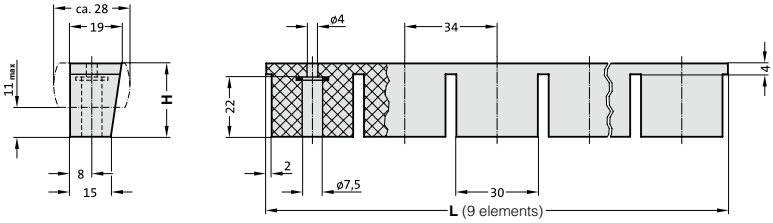

ORDER EXAMPLE

Art.	H=11,5	L=270
C17.40.	11	270

OMCR CODE	H	L
C17.40.11270	11,5	270
C17.40.16270	16,5	270
C17.40.27306	27	306

ANTI-REBOUND ELASTOMER - DÄMPFUNGSELEMENT - AMMORTIZZATORE ANTIRIMBALZO

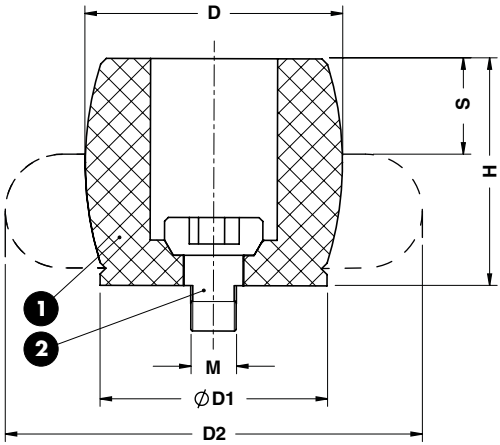

STOCK ... 3D WEB

Notes

1. **Material:** CO-Polyester Elastomer
2. Screw

ORDER EXAMPLE

Art.
C17.51.1211

OMCR CODE	D	D1	D2	M	H	S	Nm/S
C17.51.1211	12	11	15	3	11	4	2
C17.51.1716	17	15	22	4	16	6	6
C17.51.2118	21	18	26	5	18	7	10
C17.51.2219	22	19	27	6	19	6	11.5
C17.51.2826	28	25	36	6	26	9	29
C17.51.3430	34	30	43	6	30	10	48
C17.51.3733	37	33	48	8	33	12	65

OMCR

ANTI-REBOUND ELASTOMER - DÄMPFUNGSELEMENT - AMMORTIZZATORE ANTIRIMBALZO

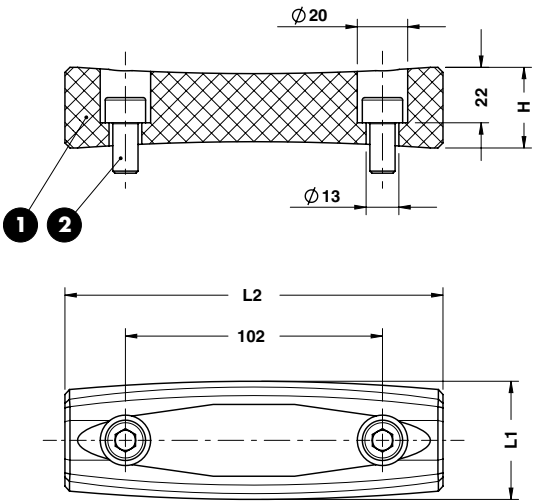

STOCK ... 3D WEB

Notes

1 **Material:** CO-Polyester Elastomer

2 M10 DIN 912

ORDER EXAMPLE	Art.	H=32	L1=47	L2=150
	C17.52.	32	47	150

OMCR CODE	H	L1	L2
C17.52.2952153	29	52	153
C17.52.3247150	32	47	150

ANTI-REBOUND SLIDE STOP - ARRETIERUNG GEGEN RÜCKFEDERUNG - ARRESTO ANTIRIMBALZO

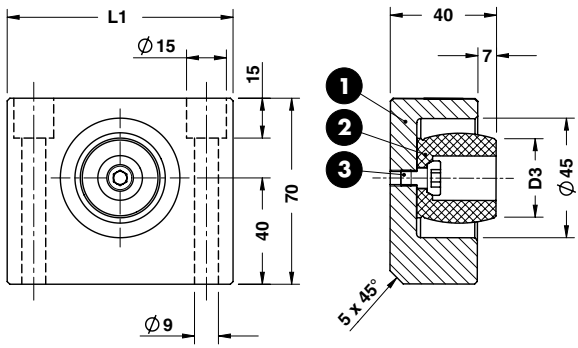

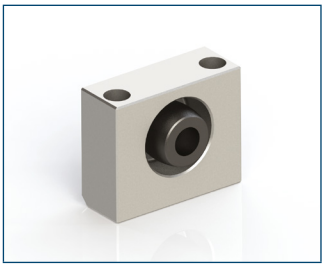

STOCK ... 3D WEB

Notes

1. **Material:** CK45
2. C17.51
3. Screw

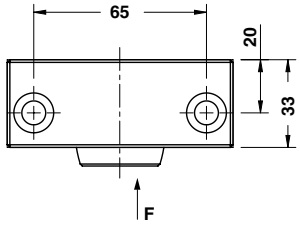

ORDER EXAMPLE	Art.	L1=85	D3=30
	C18.05.	85	30

* Maximum absorbed energy
Engergieaufnahme
Massima energia assorbita

OMCR CODE	L1	D3	F max (kN)	Max Energy Absorbed (J)*	Max Stroke (mm)
C18.05.8530	85	30	3,75	8	7

Application example

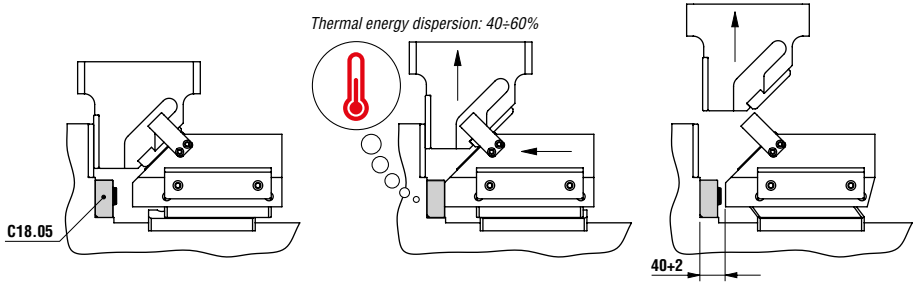

Work Position | Impact | Stop position

OMCR

SLIDE STOP BLOCK - SCHIEBERANSCHLAG - ARRESTO SLITTA

STOCK

3D WEB

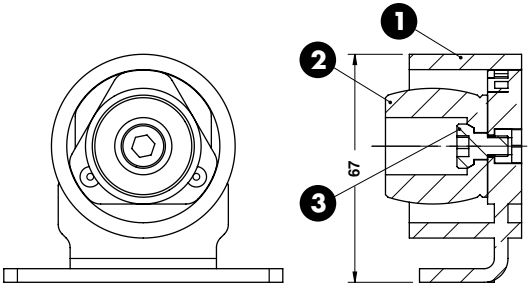

Notes

1. **Material:** St37
2. **Material:** CO-Polyester Elastomer
3. M6x12 DIN 912

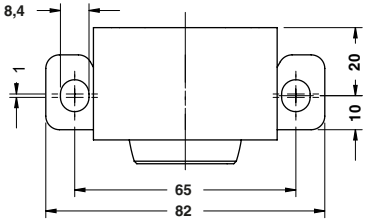

ORDER EXAMPLE

Art.
C18.06.01

OMCR CODE	F max (kN)	Max Energy Absorbed (J)*	Max Stroke (mm)
C18.06.01	3,75	8	7

ANTI-REBOUND SLIDE STOP - ARRETIERUNG GEGEN RÜCKFEDERUNG - ARRESTO ANTIRIMBALZO

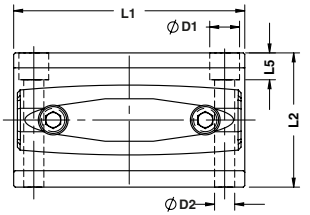

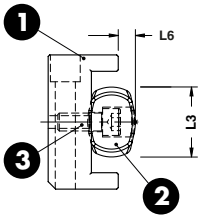

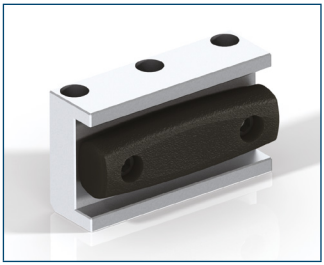

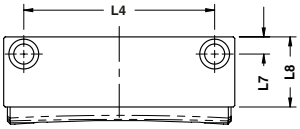

FORM A

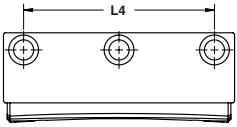

FORM B

STOCK ... 3D WEB

Notes

1. **Material:** CK45
2. C17.52
3. M10 DIN 912

* Maximum absorbed energy
Engergieaufnahme
Massima energia assorbita

ORDER EXAMPLE

Art.	L1=155	L2=90	L3=52
C18.07.	155	90	52

OMCR CODE	F max (kN)	Max Energy Absorbed (J)*	Max Stroke (mm)	Nr. of screws	FORM
C18.07.1558047	155	210	10,3	2	A
C18.07.1559047	47	160	14	3	B
C18.07.1559052	370	230	7	2	A

OMCR CODE	L1	L2	L3	L4	L5	L6	L7	D1	D2
C18.07.1558047	155	80	47	130	9	10,3	10	15	9
C18.07.1559047	155	90	47	128	18	14	11,5	20	13,5
C18.07.1559052	155	90	52	130	19	7	10	15	9

Application example

Thermal energy dispersion: 40÷60%

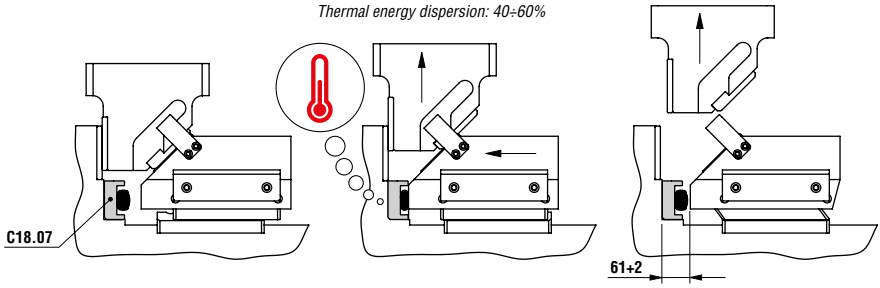

Work Position | Impact | Stop position

C18.10

OMCR

SLIDE STOP BLOCK - SCHIEBERANSCHLAG - ARRESTO SLITTA

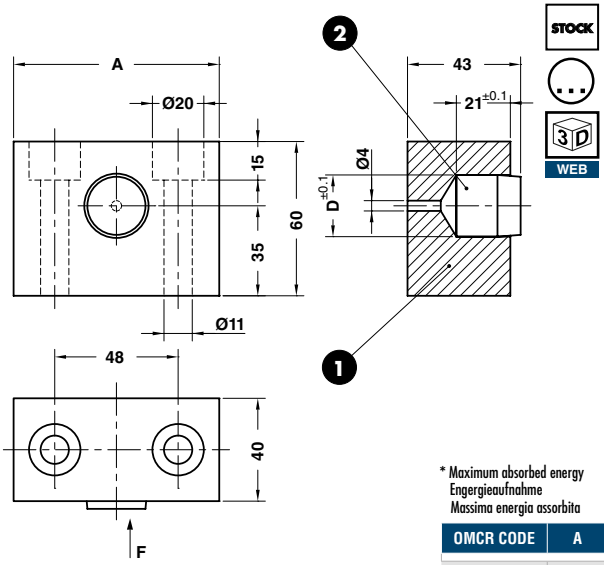

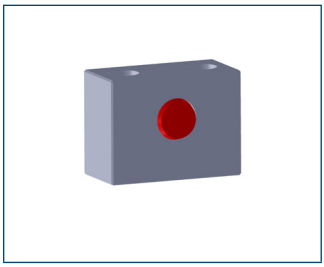

Notes

1. **Material:** CK45
2. C17.20.2425

* Maximum absorbed energy
Engergieaufnahme
Massima energia assorbita

ORDER EXAMPLE	Art.	A=80	D=24
	C18.10.	80	24

OMCR CODE	A	D	F max (kN)	Max Energy Absorbed (J)*
C18.10.8024	80	24	3	4,8

C18.11

OMCR

SLIDE STOP BLOCK - SCHIEBERANSCHLAG - ARRESTO SLITTA

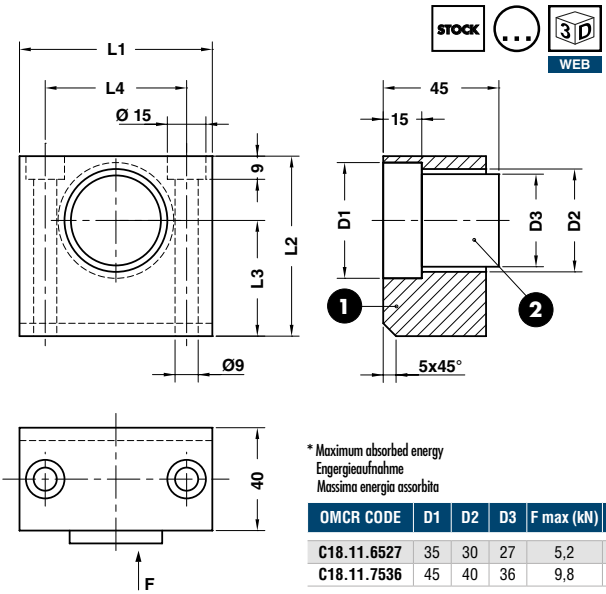

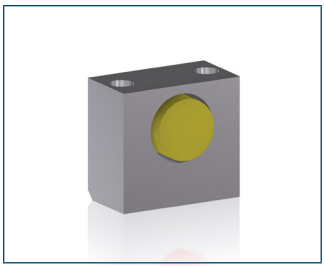

Notes

1. **Material:** CK45
2. **Material:** Elastomer 90 SH

* Maximum absorbed energy
Engergieaufnahme
Massima energia assorbita

ORDER EXAMPLE	Art.	L1=65	D3=27
	C18.11.	65	27

OMCR CODE	D1	D2	D3	F max (kN)	L1	L2	L3	L4	Max Energy Absorbed (J)*
C18.11.6527	35	30	27	5,2	65	60	40	45	13
C18.11.7536	45	40	36	9,8	75	70	45	55	24,5

OMCR

SLIDE STOP BLOCK - SCHIEBERANSCHLAG - ARRESTO SLITTA

3D WEB

STOCK

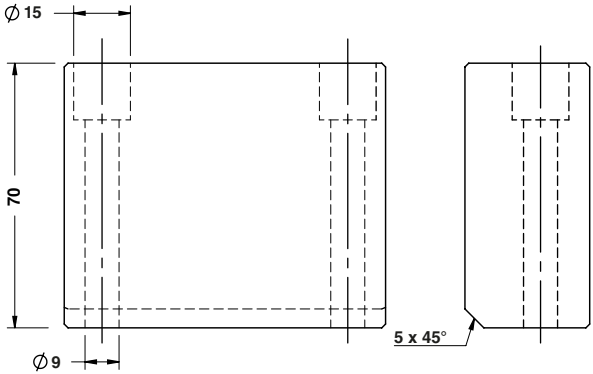

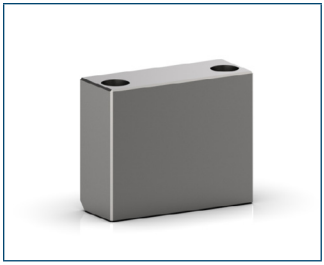

Notes

Material: CK45

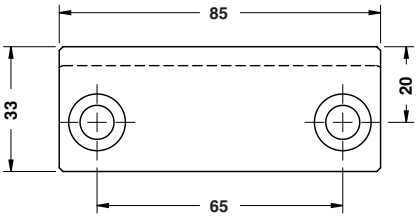

ORDER EXAMPLE

Art.
C18.12.01

OMCR CODE
C18.12.01

OMCR

POSITIVE RETURN PLATE - ZWANGSRÜCKHOLER - GANCIO DI SICUREZZA

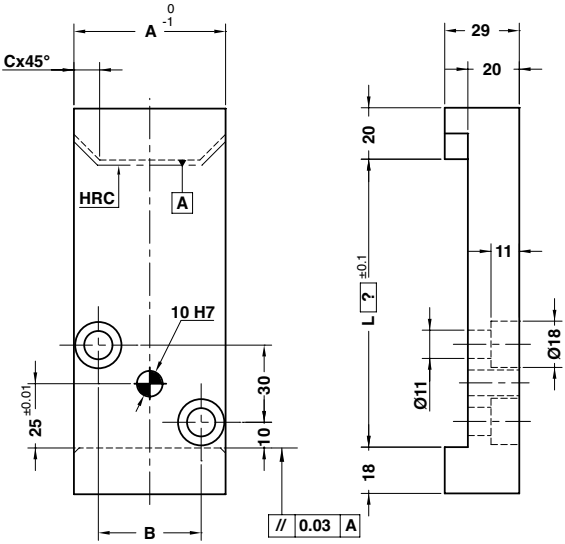

10 3D WEB

Notes

Material: CK45 - **HRC:** 52÷54

Application example

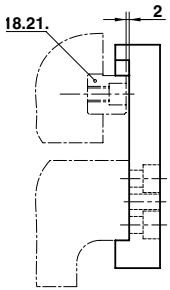

ORDER EXAMPLE	Art.	A=35	L=?
	C18.20.	35	80

OMCR CODE	A	B	C
C18.20.35	35	15	7
C18.20.60	60	40	10

KEY - PASSFEDER - CHIAVETTA

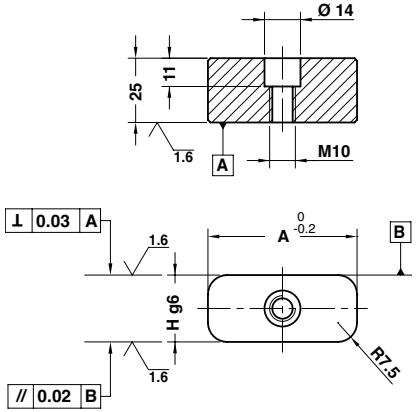

* For adjustment
Für umrüsten
Per adattamento

STOCK

3D WEB

Notes

Material: 90MnCrV8 - **HRC:** 58÷60

Application example

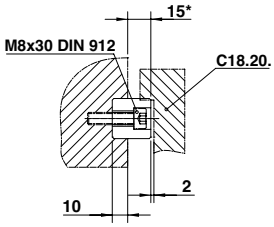

ORDER EXAMPLE	Art.	H=26	A=35
	C18.21.	26	35

OMCR CODE	H	A
C18.21.2635	26	35
C18.21.2660	26	60

CAM BLANK-HOLDER GUIDE - FÜHRUNG FÜR ZIEHKISSEN - GUIDA PER PREMILAMIERA

Notes

Material: Bronze + Graphite - **HB** >190

STOCK

WEB

"FORM A"

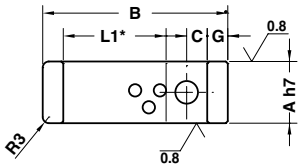

"FORM B"

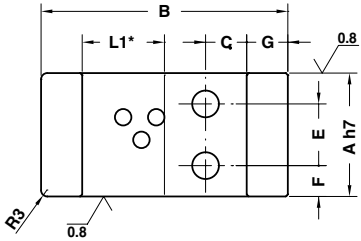

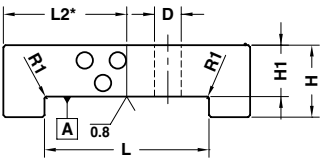

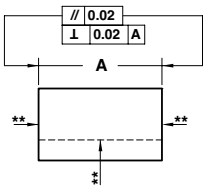

ORDER EXAMPLE

Art.	A=30	B=70
C18.25.	030	070

* Surface with solid lubricant / Oberfläche mit Festschmierstoff / Superficie con inserti autolubrificanti

** Sliding Surface / Geitfläche / Superficie di Scorrimento

OMCR CODE	A	B	C	D	E	F	G	H	H1	L	L1	L2	FORM
C18.25.030070	30	70	10	11	-	-	10	17	12	50	30	40	A
C18.25.030090	30	90	10	11	-	-	10	17	12	70	50	60	A
C18.25.045070	45	70	10	11	22	11,5	10	25	15	50	30	40	B
C18.25.045090	45	90	10	11	22	11,5	10	25	15	70	50	60	B
C18.25.060120	60	120	20	13	30	15	20	35	25	80	40	60	B
C18.25.060140	60	140	20	13	30	15	20	35	25	100	60	80	B
C18.25.060160	60	160	20	13	30	15	20	35	25	120	80	100	B

COUPLING PLATE – BEFESTIGUNGSPLATTE - STAFFA DI REAZIONE

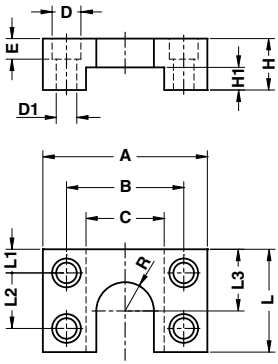

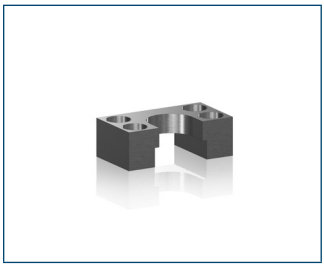

STOCK 3D WEB

Notes

Material: CK45

ORDER EXAMPLE	Art.	A=80	R=14
	C18.30.	080	14

OMCR CODE	A	B	C	D	D1	E	H	H1	L	L1	L2	L3	R
C18.30.08014	080	57	38	18	11	10	25	11	50	11,5	27	30	14
C18.30.10020	100	75	50	20	13	12	32	15	55	12,5	30	35	20
C18.30.12025	120	88	60	26	17	16	40	20	65	16	33	45	25
C18.30.15033	150	114	80	33	22	26	45	20	100	18	64	64	33

OMCR

COUPLING NUT - KUPPLUNGSMUTTER - AGGANCIO STAFFA

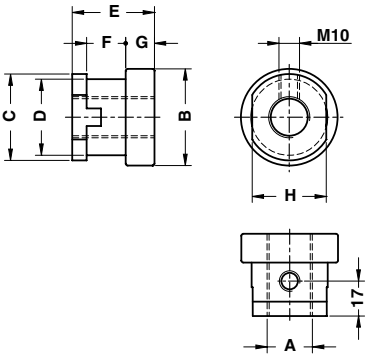

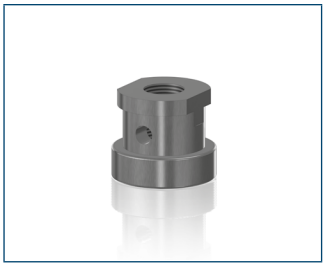

STOCK 3D WEB

Notes

Material: CK45

ORDER EXAMPLE

Art.	D=47	A=M27
C18.31.	47	M27

OMCR CODE	A	B	C	D	E	F	G	H	Air cyl. (I.S.O.) bore size	Using with coupling plate
C18.31.25M10	M10x1,25	35	30	25	30	16	10	24	32	C18.30.08014
C18.31.25M12	M12x1,25	35	30	25	30	16	10	24	40	C18.30.08014
C18.31.37M16	M16x1,5	47	42	37	40	19	14	36	50, 63	C18.30.10020
C18.31.37M20	M20x1,5	47	42	37	40	19	14	36	80, 100	C18.30.10020
C18.31.37M27	M27x2	47	42	37	40	19	14	36	125	C18.30.10020
C18.31.47M27	M27x2	57	52	47	50	24	19	46	125	C18.30.12025
C18.31.47M36	M36x2	57	52	47	50	24	19	46	160, 200	C18.30.12025
C18.31.59M42	M42x2	76	64	59	76	50	19	60	250	C18.30.15033

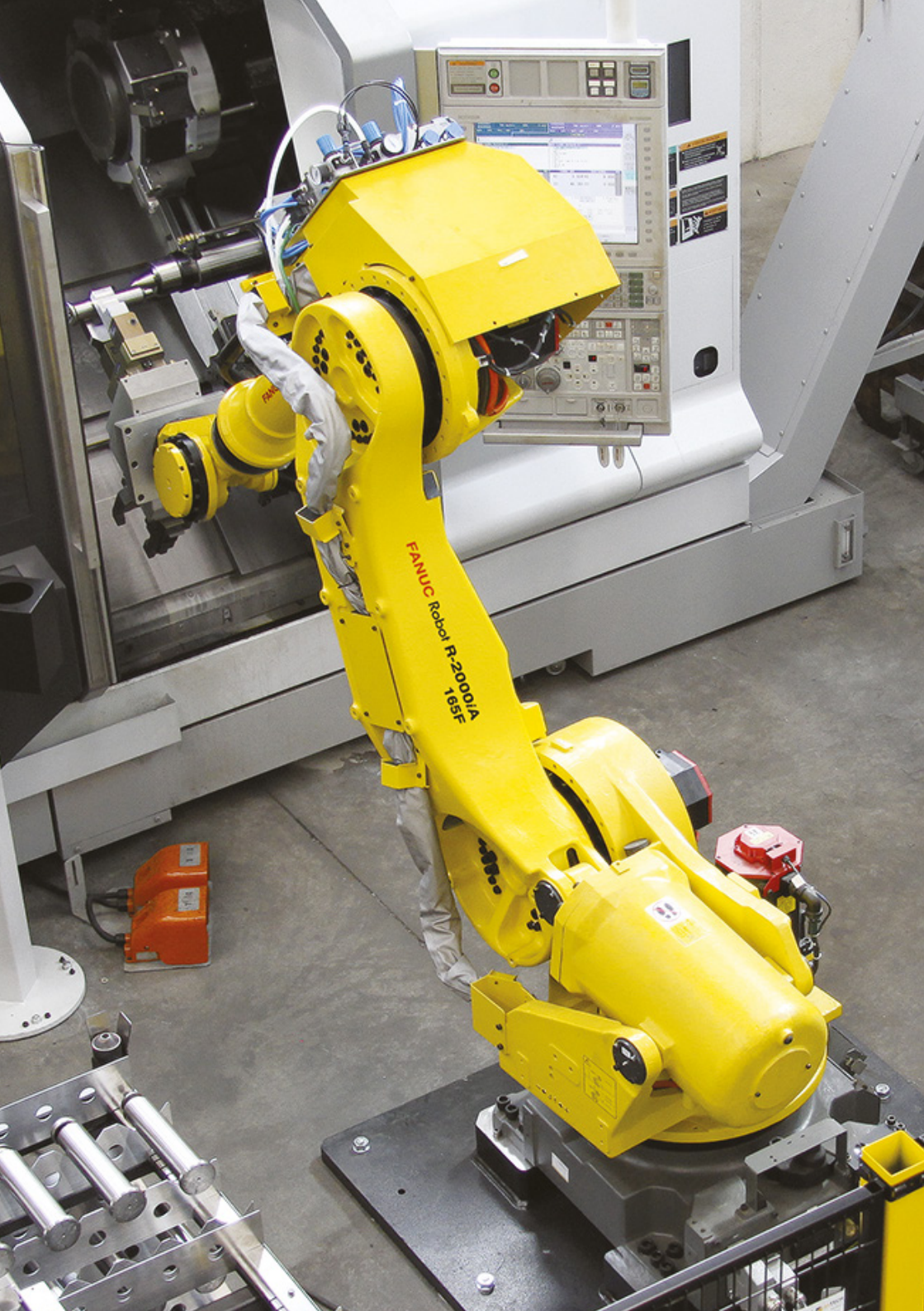
FANUC Robot R-2000iA
165F